002-550

Fiberglass Boat Repair & Maintenance

Repairing, restoring and prolonging the life of fiberglass boats with WEST SYSTEM® Brand Epoxy

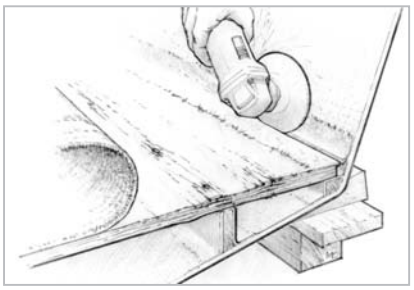

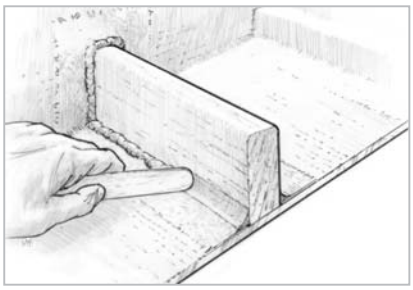

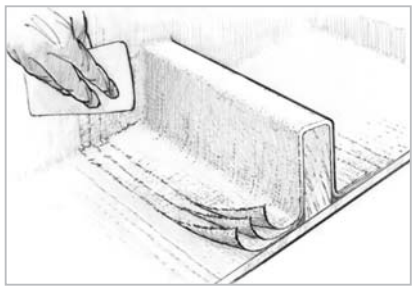

Contents

1 Introduction
Understanding fiberglass boat construction and using WEST SYSTEM Epoxy for repair

2 Repairing Minor Cracks and Holes
Repairing and finishing surface and gelcoat damage

3 Repairing Stringers and Floors
Repairing rotted stringers and floors, and adding reinforcing to increase panel stiffness

4 Repairing Solid Fiberglass Laminate
Assessing and repairing structural damage to solid fiberglass laminate

5 Repairing Cored Fiberglass Laminate
Repairing delaminated cores and replacing damaged core material

6 Repairing and Upgrading Soles and Decks
Repairing delaminated plywood soles and decks, and installing a teak veneer deck

7 Installing Hardware
Installing new hardware and repairing loose hardware with improved load carrying ability

8 Repairing Keels and Rudders
Repairing impact damage and worn rudder bearings, templating keels and rudders

9 Using WEST SYSTEM Epoxy
Using WEST SYSTEM products safely and effectively

Appendix
Estimating guide for WEST SYSTEM products
Tools
Cold temperature bonding and coating techniques
Problem solving guide
Index

WEST SYSTEM® BRAND

Catalog Number 002-550

Fiberglass Boat Repair & Maintenance

Repairing, restoring and prolonging the life of fiberglass boats with WEST SYSTEM® Brand epoxy.

14th Edition—December, 2006

The techniques described in this manual are based on the handling characteristics and physical properties of WEST SYSTEM Epoxy products. Because physical properties of resin systems and epoxy brands vary, using the techniques in this publication with coatings or adhesives other than WEST SYSTEM is not recommended. This manual is updated as products and techniques change. If the last copyright date below is more than several years old, contact your WEST SYSTEM dealer or West System, Inc. Refer to the current WEST SYSTEM User Manual & Product Guide for complete product information, and safety and handling information.

The information presented herein is believed to be reliable as of publication date, but we cannot guarantee its accuracy in light of possible new discoveries. Because West System, Inc. cannot control the use of its products in customer possession, we do not make any warranty of merchantability or any warranty of fitness for a particular use or purpose. In no event, shall West System, Inc. be liable for incidental or consequential damages.

WEST SYSTEM and Scarffer are registered trademarks, and Microlight and Episize are trademarks of West System, Inc., Bay City, Michigan, USA.

Copyright © February 1987, August 1987, January 1988, September 1988, May 1992, April 1993, May 1994, January 1996, August 1998, June 2000, June 2001, February 2003, June 2004, December 2006 by West System, Inc.

Published by West System, Inc., Bay City, Michigan, USA. All Rights reserved. No part of the contents of this book may be reproduced or transmitted in any form or by any means without the written permission of the publisher.

Printed in the USA.

Table of contents

1 Introduction . . . 1
- 1.1 Typical fiberglass boat construction . . . 1
- 1.2 WEST SYSTEM epoxy for fiberglass repair . . . 4

2 Repairing Minor Cracks and Holes . . . 5
- 2.1 Minor crack and abrasion repair . . . 6
- 2.2 Finishing . . . 7

3 Repairing Stringers and Floors . . . 10
- 3.1 Repairing local core damage . . . 11
- 3.2 Stringer repair guidelines . . . 12
- 3.3 Replacing active core sections . . . 12
- 3.4 Replacing stringers . . . 13
- 3.5 Reinforcing to improve panel stiffness . . . 16

4 Repairing Damaged Skins . . . 21
- 4.1 Assessing and preparing the damaged area . . . 21
- 4.2 Backing a repair patch . . . 22
- 4.3 Laminating a repair patch . . . 25

5 Repairing Core Related Damage . . . 28
- 5.1 Repairing skin delamination . . . 28
- 5.2 Replacing damaged cores . . . 31
- 5.3 Repairing transom delamination . . . 33
- 5.4 Repairing holed panels . . . 39

6 Repairing and Upgrading Soles and Decks . . . 42
- 6.1 Repairing delaminated soles and decks . . . 42
- 6.2 Installing a teak deck . . . 44

7 Installing Hardware . . . 47
- 7.1 Bonding fasteners . . . 48
- 7.2 Bonding fasteners and hardware . . . 49
- 7.3 Casting epoxy bases for hardware . . . 52
- 7.4 Making fasteners removable . . . 54
- 7.5 Removing bonded hardware . . . 54

8 Repairing Keels and Rudders . . . 55
- 8.1 Repairing internal ballast keels . . . 55
- 8.2 Repairing external ballast keels . . . 56
- 8.3 Templating keels and rudders . . . 57
- 8.4 Repairing worn rudder bearings . . . 59

9 Using WEST SYSTEM Epoxy . . . 61
- 9.1 Epoxy safety . . . 61
- 9.2 Epoxy products . . . 62
- 9.3 Handling epoxy . . . 64
- 9.4 Basic techniques . . . 69

Appendix
- A Estimating guides for WEST SYSTEM products . . . 79
- B Tools . . . 80
- C Cold temperature bonding and coating techniques . . . 81
- D Problem solving guide . . . 83

Index . . . 86

1 Introduction

Over the last several decades the popular perception of fiberglass boats is that they are maintenance free and far more durable than the wooden boats that preceded them. While fiberglass boats do, on average, require less maintenance, they are not without problems. In addition to the usual damage from collisions, groundings and the forces of nature, fiberglass boats also suffer from many of the same age related problems of fatigue and moisture that have long been associated with older traditionally built wooden boats.

This manual provides repair and maintenance solutions to many of the problems that afflict fiberglass boats.

1.1 Typical fiberglass boat construction

A fiberglass boat is a composite structure, made of many layers of various reinforcing fabrics and core materials, bonded together with plastic resins. You could also look at it as a plastic resin shell reinforced with various fibers, or Fiber Reinforced Plastic (FRP). Most loads in the structure are carried by the fibers in the laminate. Resin and core materials support the fibers in positions to effectively carry and spread the loads. Generally, the higher the proportion of fiber to resin in a laminate, the greater its strength and stiffness.

The continuity of these resin/fiber skins is critical to the integrity of the structure. It is often necessary to cut through the skin while carrying out repairs, even though the skin itself may not be damaged. Keep in mind that one objective will always be to rebuild for skin continuity to return the load carrying ability of the fibers in the laminate to original or greater strength.

1.1.1 Fiberglass resins

The vast majority of fiberglass boats in use today are built with polyester resin. Modern unsaturated polyesters used in boat construction are made up of three basic components: glycol, organic acid and reactive diluents (usually styrene). If you were to look at uncured polyester resin at a molecular level, you would see what appear to be thousands of chains made up of alternating glycol and acid units. These chains are polyester pre-polymers. Adding a peroxide catalyst, typically MEKP, to the polyester resin mixture initiates a cross-linking reaction, that causes the styrene to create bridges, linking adjacent pre-polymer chains together. As the mixture cures, more and more bridges are established, and the free-flowing glycol/acid chains begin to gel, becoming a solid mass. Eventually, enough bridges are built to form a rigid, three-dimensional matrix. The mixture has become a thermoset plastic solid, used in this case, to hold bundles of fibers together in the shape of a boat.

1.1.2 Fibers

Fibers used in production fiberglass boats take the form of various types of fabrics, including mat (chopped-strand mat), woven cloth and roving, and uni-directional, bi-axial and tri-axial cloth. Each fabric type offers different properties and they are often used in combination to provide specific strength or stiffness properties in different parts of a laminate. Fabric selection may also be based on handling characteristics and cost. Most fabrics are woven or stitched together bundles of individual continuous pultruded fibers of various synthetic plastics. The least

expensive and most common fiber used in production boats is E-glass. It is widely available and used extensively for repair. Fibers may also be made of more exotic and expensive materials like aramid or graphite. These fibers offer much higher strengths as well as higher costs and are used primarily in one-off, high-performance boats where saving weight is worth the higher cost. Stitched fabrics represent a major advancement in composite technology, by allowing higher fiber-to-resin ratios and stiffer laminates than woven fabrics of equal weight.

1.1.3 Cores

Cores are used in laminates to increase stiffness of a panel without adding a proportional increase in weight. Doubling a panel's thickness can result in a panel that is eight times stiffer. By laminating a lightweight core between two fiber/resin skins a lot of stiffness can be gained with a minimum amount of added weight. The skins still take all of the tensile and compressive loads caused by bending the panel but the "I" beam effect produced by the addition of the core allows the panel to withstand much greater bending loads. End-grained balsa is the most widely used core material in production boats. It offers low cost and good impact resistance and compressive strength to resist the collapsing of skins under load. PVC foam cores are available in a variety of characteristics. They are more expensive than balsa, but more resistant to moisture damage. Honeycomb core is an open corrugated pattern of paper or other thin material on edge. Honeycomb is often used in prefabricated panels for bulkheads and other interior components.

1.1.4 Construction methods

Generally, production fiberglass boat hulls are built in a female mold. A release agent is first applied to the surface of the mold, over which the gelcoat material is applied. Gelcoat is usually a pigmented, unsaturated polyester resin and may be anywhere from 12 to 22 mils thick. It is designed to act as a moisture barrier for the underlying laminate, as well as to provide a smooth, glossy, cosmetic finish. Subsequent layers of fabric are saturated with resin and laid up over the gelcoat. There are as many lay-up schedules as there are boats. A typical hull section might consist of the layer of gelcoat, several alternating layers of mat and woven roving, and in many cases a core material such as end grain balsa or foam, followed by several more alternating layers of saturated mat and woven roving *(Figures 1-1 and 1-2)*. Hull thickness may vary from boat to boat. Older boats were often laid up with a solid glass laminate thickness of 1½" (3.8 cm) to as much as 5" (12.7 cm) in the keel areas of the more heavily-built boats. Today, however, the trend is toward thinner, lighter laminates, making the structural integrity of each of the laminate components all the more critical.

Standard lay-up relies on gravity to hold all of the resin saturated material in place until cured. The technique of vacuum bag laminating has advanced composite construction by allowing the

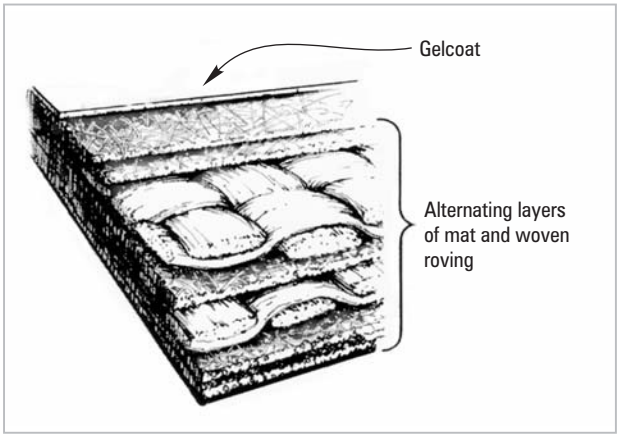

Figure 1-1 *Typical* ***solid*** *(single skin) fiberglass laminate. Various reinforcing fabrics are bonded together with polyester resin.*

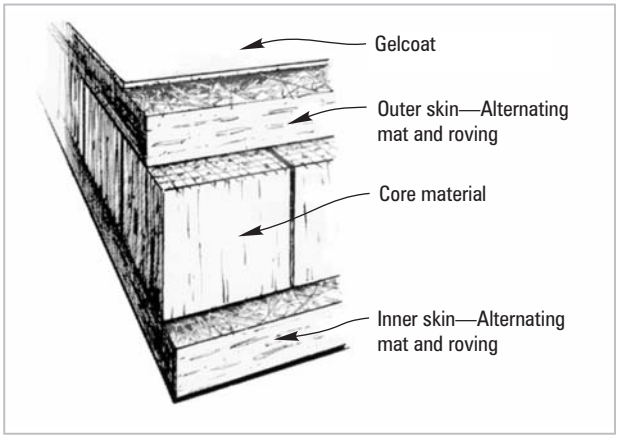

Figure 1-2 *A typical* ***cored*** *laminate consists of end-grained balsa or other core material sandwiched between two resin/fiber skins.*

builder to compress the entire wet-out laminate evenly in the mold, and more accurately control the resin content and the strength-to-weight ratio of the laminate.

Although it's not often associated with fiberglass boats, wood is used extensively in fiberglass boat construction for primary and secondary structural members like bulkheads, frames and stringers, core material, blocking and trim. Stringers, bulkheads and other interior fixtures are bonded in after the shell is laid up. Many fiberglass boat repairs involve wood and the problems associated with using polyester resins to bond to wood.

Terminology used to describe the structure of fiberglass boats is not always the same terminology used to describe wooden boats. Where fiberglass boat components serve the same functions as wooden boat components, their names are often the same. However, materials, and manufacturing methods vary from small boat to large boat, from power to sail and from manufacturer to manufacturer. Here is a general guide to the fiberglass boat terminology used in this manual *(Figure 1-3)*.

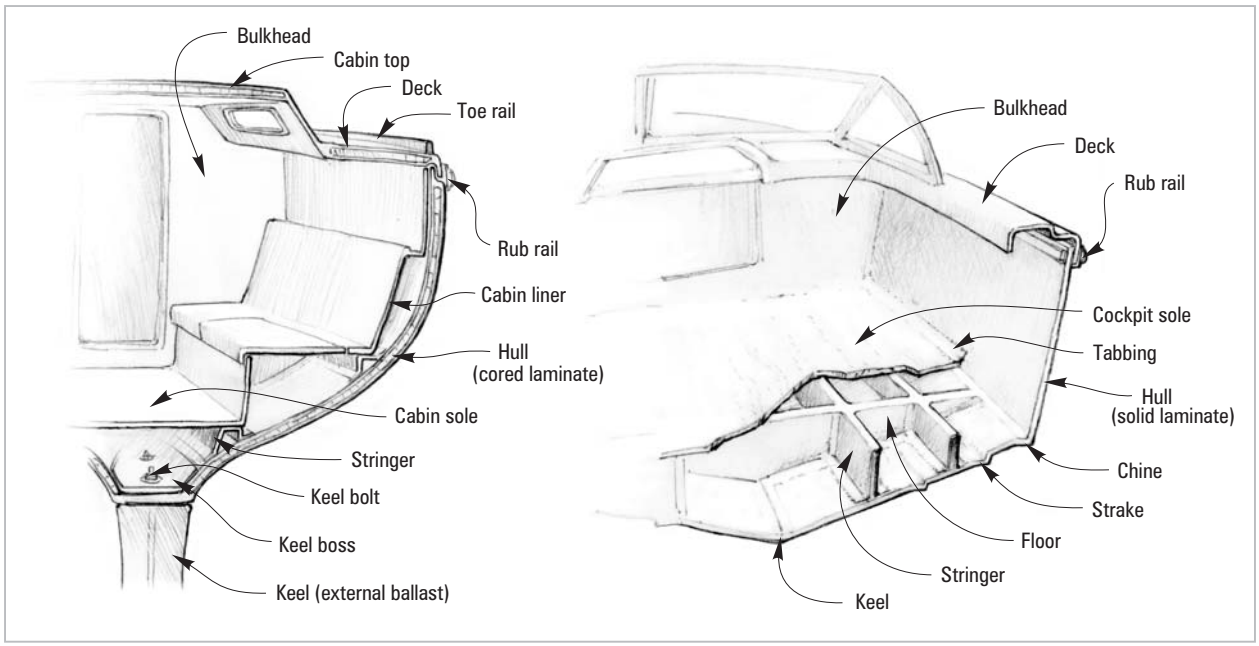

Figure 1-3 *Components of typical fiberglass sail and power boats*

1.1.5 Hydrolysis and gelcoat blisters

The repair procedures in this manual address problems most often associated with mechanical damage–abrasion, bending, fatigue, impacts and the resulting water damage to cores or other structural components. Another type of damage common to fiberglass boats is chemical in nature. Hydrolysis (and its symptom, gelcoat blisters) is a widespread and growing problem in the fiberglass boat world.

Hydrolysis is more than a cosmetic problem. Water soluble materials in a polyester resin laminate mix with moisture that has penetrated the laminate to create an acidic fluid. The fluid collects in cavities under the gelcoat layer to form blisters. This acidic mixture also attacks the polyester resin, severing the chemical bonds that hold the resin matrix together, as well as the resin to fiber bonds. Once hydrolysis has started in a polyester hull, the hull's strength has been compromised and the potential for serious additional hydrolysis will never go away.

If you own a fiberglass boat built with polyester resin, you should be aware that the potential for this problem is high, especially in warmer climates. Any damage due to hydrolysis should be included in an assessment of a boat's condition before repairs are made. Although the subject is

too large to be adequately addressed in this manual, hydrolysis and gelcoat blisters can be treated with WEST SYSTEM epoxy to limit further damage and in many cases restore a hull's structural integrity. For more information about hydrolysis and gelcoat blisters refer to *002-650 Gelcoat Blisters-Diagnosis, Repair & Prevention*, published by West System Inc.

1.2 WEST SYSTEM epoxy for fiberglass repair

Unsaturated polyester resins perform fairly well during the construction of a structure when all of the layers of resin are applied and allowed to cure together. This type of bond is considered a primary bond. Problems can occur, however, when you try to bond polyester resin to a previously cured laminate as is necessary in every repair application. This type of bond is secondary or post-bonding.

To effectively repair damage typical of fiberglass boats, the repair material must be a superior structural adhesive, capable of bonding not only to polyester resin, but also to glass fiber, wood, metal and other materials.

There are several important reasons to use WEST SYSTEM epoxy rather than a polyester resin or other material for fiberglass boat repair. Polyester resin can shrink from 5% to 8%, creating stress concentrations at the repair joint. In addition, epoxy is more effective as a moisture barrier and it forms a superior mechanical bond with the cured polyester and other materials in secondary bonding. Since epoxy is more durable than polyester, the epoxy repair actually may be stronger than the original structure. When you consider ease and practicality of application, availability, safety and access to technical assistance, WEST SYSTEM epoxy is an excellent choice for fiberglass boat repair.

1.2.1 Using this manual

This manual begins with techniques for repairing common minor damage to hull and deck surfaces and progresses to more complicated structural repairs. Section 2 includes basic surface repairs and cosmetic finishing. Section 3 describes methods for repairing rotted stringers and adding reinforcing to areas of the hull or deck that are too flexible. Sections 4 and 5 deal with repairs of more serious damage to solid and cored hull and deck panels. The later sections include specific deck repair and modification, hardware attachment and keel and rudder repair. After the structural repairs are completed, you may be referred back to Section 2 for the surface repair and cosmetic finishing.

Study and become familiar with all of the steps in a procedure before beginning a repair. The procedures described in this manual assume a working knowledge of WEST SYSTEM products and the basic techniques of epoxy use. If you are unfamiliar with or have any questions about the application and handling techniques of WEST SYSTEM Brand epoxy products, read Section 9–*Using WEST SYSTEM Epoxy* thoroughly before proceeding with repairs. The WEST SYSTEM *User Manual & Product Guide* also provides basic epoxy handling information as well as complete current product descriptions and selection and coverage information. It is a free publication available through WEST SYSTEM dealers or by contacting West System Inc.

Some fiberglass repair procedures can be hazardous. Always wear appropriate eye protection, skin protection and a dust mask when cutting or grinding fiberglass. Follow safety guidelines when handling epoxy *(Section 9.1)*.

If you have additional questions after reading the Using WEST SYSTEM Epoxy section, you may write or call the West System technical staff:

West System Inc.
P.O. Box 665
Bay City, MI 48707

866-937-8797 (8:00 AM-5:00 PM EST) Fax 989- 684-1287
www.westsystem.com ■

2 Repairing Minor Cracks and Holes

Most of the repair jobs found on fiberglass boats are cosmetic in nature. Cracking or crazing of the gelcoat and scrapes and dings account for much of the repair work being done in boat shops. Permanent repairs to these types of damage can be made with WEST SYSTEM epoxy. When properly applied, an epoxy repair affords an extremely durable, water-resistant repair that offers an excellent base for various finishes. This section addresses the cosmetic repair of minor surface damage and cracking, and panel reinforcement to reduce the cause of cracking.

2.0.1 Assessing damage

It's easy to account for the scrapes, dings and cracks that result from impacts, but the causes of flex cracking or crazing may not be as obvious. Most cracks or crazing that appear gradually and get worse over time are the result of flexing and are most often found in areas of solid laminate. They often appear near a bulkhead, deck to cabin curve, or window. In addition to the cosmetic surface repair, a thorough repair will often require structural repair or reinforcing to reduce the flexing. The longer a laminate is allowed to flex, or the greater the impact, the deeper the cracks. The deeper a crack extends into the laminate, the more the panel's strength is reduced. The first step in the repair is to prepare the damaged area and assess the degree of damage:

1. Examine the pattern and location of cracks to determine their cause *(Figure 2-1)*. If the pattern or location indicates flexing, examine the interior side of the panel to determine the best location for additional reinforcing. If the cracks are a result of impact, examine the interior side of the panel to determine whether damage extends through the entire laminate.

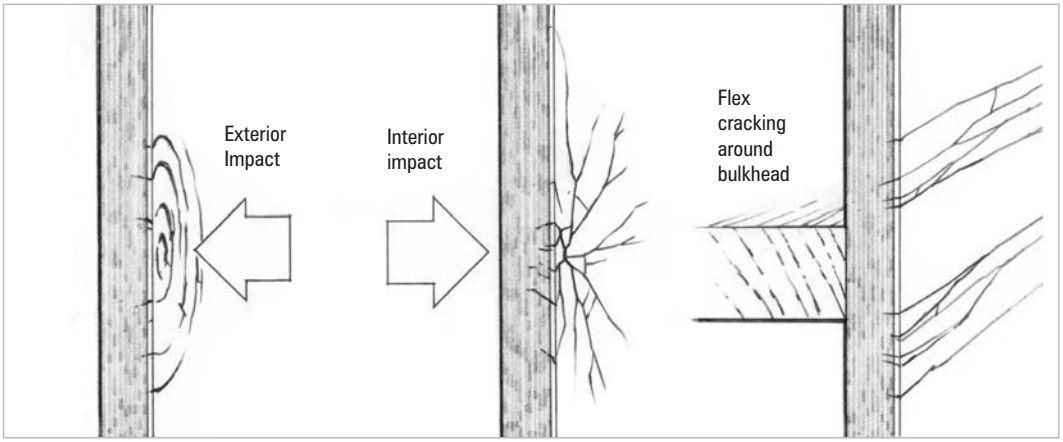

Figure 2-1
Typical types of cracks from impact or flexing. The pattern of cracking may help to determine their cause.

2. Remove any surface contaminants such as wax, oil or mold release. Wipe an area at least twice as large as the damaged area with a wax and silicone remover (Dupont Prep-Sol® #3919S), acetone or other appropriate solvent. Dry the area with clean paper towels before the solvent evaporates.
3. Open the cracks for repair. Use a sharpened "V" shaped tool to scrape down to the bottom of the cracks *(Figure 2-2)*. A puncture-type can opener with the tip sharpened to about 90° works well. Beveling the sides of the crack provides more bonding area for the repair. It may be more

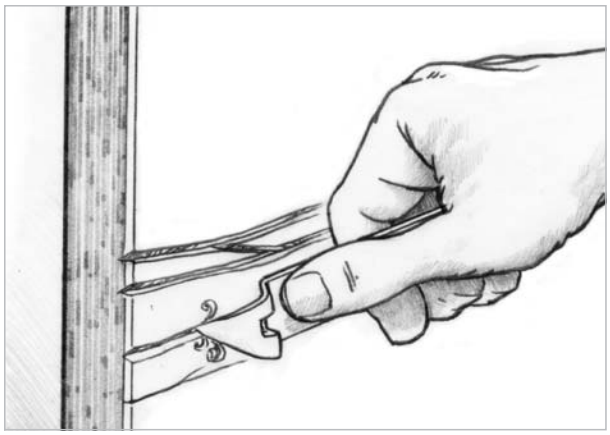

Figure 2-2 *Open shallow and minor cracks with a "V"-shaped scraper, such as a sharpened can opener.*

Figure 2-3 *Grind out an area of many closely spaced or deep cracks with a disk grinder.*

effective to grind out an entire area of many, closely spaced or deep cracks *(Figure 2-3)*. Scrape or grind as deep as necessary to reach solid, undamaged material. The depth of the crack will determine which course of repair to follow:

a. Shallow cracks or scrapes that affect only the gelcoat layer may be repaired with the gelcoat repair technique described in Section 2.2.1. If necessary, reinforce the laminate to reduce flexing as described in Section 2.3. Some small cracks or chips can be filled with a gelcoat touch-up kit.

b. Minor cracks or scrapes that run through the gelcoat into the first chopped strand mat layers of the laminate *(Figure 1-1)* should be repaired with epoxy using the procedures described below (Section 2.1). Finish with the gelcoat repair technique described later in Section 2.2.1. If necessary, reinforce the laminate to reduce flexing as described in Section 3.

c. Deep cracks extending into woven fabric of the laminate require a structural repair before beginning the cosmetic gelcoat repair. If the crack extends into or through the woven fabric of the skin, follow the procedures in Section 4. If a core has delaminated or is damaged from moisture penetration or impact, follow the appropriate procedure in Section 5.

2.1 Minor crack and abrasion repair

Minor cracks and scrapes that extend to the chopped strand mat layers of laminate may be repaired with WEST SYSTEM epoxy.

Scraped out damage

If cracks were exposed with a "V" shaped scraper, complete the repair as follows after preparing the damaged area as described above:

1. Feather the edges with the scraper or with 100-grit sandpaper and brush the surface free of dust and loose material.
2. Wet out the cracks with a resin/hardener mixture.
3. Fill the cracks with a thickened epoxy mixture using the flat end of a mixing stick or a plastic spreader. Thicken the resin/hardener mixture to the consistency of peanut butter with 404 or 406 filler. Trowel the mixture flush with the surface and remove excess epoxy before it begins to cure. Allow the epoxy to cure thoroughly.
4. Sand the area smooth. Use 100-grit paper to remove any bumps or ridges. Finish by wet-sanding with 220-grit.
5. Finish the area with gelcoat or paint following the procedure in Section 2.2. Reinforce the laminate as necessary to reduce flexing, following the procedure in Section 3.

Ground out damage

If the damage is the result of a scrape or gouge, or cracks were exposed with a grinder, complete the repair as follows:

1. Grind a shallow bevel around the damaged area. Remove any dust or loose material.
2. Wet out the repair area with a resin/hardener mixture.
3. Fill the void with an epoxy/404 or 406 mixture, thickened to the consistency of peanut butter. Use a plastic spreader to shape the mixture to match the surface contour. Leave the mixture slightly higher than the surrounding area and remove any excess before it begins to cure. Allow the epoxy to cure thoroughly.
4. Sand the area to blend with the surrounding contour. Use 50-grit paper to remove any bumps or ridges and finish with 80-grit paper when you are close to the final shape.
5. Fill any remaining voids (if necessary), repeating Steps 3 and 4.
6. Apply two or three very thin coats of epoxy to seal the surface. Extend each coat slightly beyond the previous one to feather the edge. The area may be warmed with a heat lamp to speed the cure and to help the epoxy flow out. Allow the final coat to cure thoroughly.
7. Wet sand the area with 180-grit paper to prepare for the final finish.
8. Finish the area with paint or the gelcoat finishing procedure (Section 2.2.1), beginning with step 4. Reinforce the laminate as necessary to reduce flexing, following the procedure in Section 3.

2.2 Finishing

Although many types of coating systems are compatible with WEST SYSTEM epoxy and provide the necessary UV protection, we recommend polyester gelcoat for small repair areas and linear polyurethane paint for large repairs. Although gelcoat may be used over large areas, it lends itself better to small areas where it's necessary to color match existing gelcoat and its handling characteristics are more manageable. Linear polyurethane paints give extremely durable finishes and are appropriate for large complete sections like a hull or deck where color matching is not critical. Paint application over a large area is more practical than gelcoat. These finishes are recommended for above the waterline only. Use WEST SYSTEM for all repairs and coating below the waterline, prior to applying bottom paint.

2.2.1 Gelcoat finishes

In answer to questions concerning compatibility and techniques for applying polyester gelcoats over repairs made with WEST SYSTEM epoxy, we can say epoxy provides an excellent base for polyester gelcoats. The following procedure will assure good adhesion and a well matched repair color. If you have only a shallow crack or scrape that does not extend into the laminate, begin with Step 1. If you have repaired minor cracks or scrapes with epoxy and are ready to proceed with the final gelcoat finish, begin with Step 4. Be sure the epoxy has cured thoroughly. Wash the surface thoroughly to remove all traces of amine blush.

1. Remove any surface contaminants such as wax, oil or mold release. Wipe an area at least twice as large as the damaged area with a wax and silicone remover (Dupont Prep-Sol™ #3919S), acetone or appropriate solvent. Dry the area with clean paper towels before the solvent evaporates.
2. Scrape out the cracks or scratches with a 90° "V" shaped scraper to expose clean gelcoat and increase the bonding area slightly. Do not scrape through the gelcoat.
3. Fill the scraped out voids with gelcoat. Mix a small batch of gelcoat without thinners. Trowel the mixture into the voids, leaving it slightly higher than the surface. Allow the gelcoat mixture to cure thoroughly.

4. Apply tape around the perimeter of the de-waxed area. Mask the area beyond the repair to protect the boat from overspray. If there is a molded body line or corner near the repair, you may want to extend the color patch to that point. The same is true for a painted or vinyl stripe.
5. Sand the additional area out to the tape line with 320-grit paper. This will be the total area to be gelcoated.
6. Determine the gelcoat batch size for the size of the repair–approximately 80 square feet per gallon of gelcoat (20 sq ft per qt).
7. Tint the batch of gelcoat to match the color of the boat. If the boat is fairly new and the manufacturer is still in business, you may be able to get gelcoat that will be a very close color match. If this is not an option, you will need to get the gelcoat from a FRP product supplier. Many marine distributors handle the gelcoats from various resin manufacturers. You will also need pigments to tint the base color to obtain a good match. These pigments are generally available from the gelcoat suppliers. Frequently, local repair yards that do fiberglass repairs will sell these products.

   There are gelcoat additives (available through most gelcoat suppliers) that, when used properly, make matching a repair easier. These are clear, low-viscosity resins that are not air inhibited. These products are mixed with the pigmented gelcoat in place of a wax solution to provide a tack-free cured surface. They also provide the added benefit of thinning the gelcoat without changing the color of the cured patch the way acetone or styrene can. Gelcoat additives are manufactured by Duratec, and Cook Paint and Varnish Company.

   Matching the repair color to the color of the boat can be difficult. Most gelcoat colors change as they cure. As you tint the gelcoat to match, apply a small amount of uncatalyzed material to the sanded area surrounding the repair. Use your gloved finger to spread this into a sample the size of a quarter. Wait a couple of minutes for the solvents to flash off. Any color variation will be evident. If the color match is not acceptable, change the color by adding small amounts of tinting pigments. As you adjust the gelcoat color, think in terms of the basic color hues, i.e.; the color needs to be more red, blue, green or yellow. This will help you identify which of the pigments to use. Use very small amounts of the pigments. When the hue is right, adjust the brightness, darker or lighter by adding black or white. It will take much more white pigment to lighten a mixture than it will a small amount of black pigment to darken it. Apply an uncatalyzed smear with each change of color no matter how small. Leave each of these smears on the surface until you have the color as close to the boat color as you can get it. When you are satisfied with the color match, wipe away all of the test smears with acetone or lacquer thinner.
8. Divide the batch into a 2/3 portion and a 1/3 portion. Our technique for using the patching additives is slightly different than the recommended procedure.
9. Mix the patching additive with equal parts of the 2/3 portion of the matched gelcoat. Catalyze following the recommendations of the gelcoat supplier. Over or under catalyzation may prevent the product from reaching a proper cure.

   Apply this mixed gelcoat to the repair with a spray gun. Apply several light coats, feathering each one farther from the repair area. Allow the solvent to flash off between coats. You may need to apply five or six coats to hide the shadow of the repair. Most gelcoats will cure lighter in color if they are too thin. Most manufacturers recommend a total film thickness of 15 to 20 mils. Avoid applying the gelcoat in two or three heavy coats, which may cause solvent entrapment and improper curing. This may also have an effect on the color of the cured repair.
10. Mix a second batch using the 1/3 portion of gelcoat and patching additive. This time use about three parts of patching additive with one part gelcoat.

    Spray the first coat of this mixture over the previously sprayed area. Then apply two or three more coats of this mixture over the entire area. Extend each coat farther than the previous one, with the last coat out to the tape line. The semitransparent film of lightly tinted clear patching additive will allow the original gelcoat color to show through around the perimeter of the patch. This will help blend any subtle color change into the original gelcoat.

11. Allow the gelcoat to reach a full cure. Pull the tape and sand the tape line smooth. Start with 320-grit wet or dry paper and work up to 600-grit. Sand the surface of the repair if necessary.
12. Buff the surface with a white, medium-cut rubbing compound. Take your time and do not overheat the surface while buffing. The excess heat can cause a stain that will be very difficult to remove. Finish with a fine compound and wax the area.

    There are times when the repair will not match simply because the original gelcoat color has faded. You may need to polish the entire section of the boat to restore the original color.

2.2.2 Paint finishes

Although almost any high-quality marine-grade paint will work, we recommend using one of the two-part polyurethane paint systems above the waterline. (Below the waterline, apply bottom paint directly over thoroughly cured WEST SYSTEM epoxy.) These paints provide ultraviolet protection, have good gloss retention and a durable, abrasion-resistant surface, provided you follow the manufacturer's instructions carefully. Light colors, especially white, are recommended over dark colors. White reflects UV and infrared radiation better than other colors and all other things being equal outlasts other colors. Polyurethanes adhere well to fiberglass surfaces bonded with both polyester and epoxy resins. Note: seal all areas of sanded 407 and 410 fairing compound with epoxy before applying primers or paints.

It is possible to color match small areas, particularly if they are in fairly inconspicuous locations. However, if you have a large repair, or several smaller repairs over a large area, you may find it easier to repaint the entire hull or deck.

Polyurethanes, just like epoxies, are affected by moisture contamination. This means use caution when painting: don't paint early in the morning or late in the afternoon. Also avoid painting in direct sunlight.

If you've chosen to paint, you will probably be painting the entire hull, deck or cabin top. Begin by inspecting the entire surface. Wipe with a silicone and wax remover (such as DuPont Prep-Sol™ #3919-S) to eliminate any trace of mold release agents or wax. It may require two or three washings. Thoroughly abrade the surface to be painted by wet-sanding with 180-grit sandpaper, followed by 220-grit. Follow the paint manufacturer's recommendation for the final grit. Generally, the thinner the paint, the finer the grit of the final sanding. You must remove all glossiness from the surface. Polyurethanes tend to highlight any surface imperfections, rather than hide them. Check for nicks, dings or gouges and repair them as described previously.

After all repairs have been made, wash the entire painting surface with the paint manufacturer's recommended solvent. Follow the manufacturer's mixing and application instructions to the letter. It's far better to apply two or three thin coats than one thick coat. ■

3 Repairing Stringers and Floor

Reinforcing to Improve Panel Stiffness

Fixing damaged or delaminated stringers is one of the most common repairs associated with fiberglass boats. The usual causes of stringer failure are disintegration of the stringer core material, impact damage from slamming and grounding, and fatigue from normal use. Although each repair situation has its own unique problems, the following techniques are fundamental to stringer repair. These guidelines will help you repair almost any damaged stringer.

3.0.1 Typical stringer construction

Stringers are support members bonded into boat hulls, usually oriented parallel to the long axis of a boat hull. Floors are support members oriented perpendicular to the long axis of the hull. They are there for a variety of reasons. They stiffen unsupported flatter hull panels in the same way that ribs or beams are used to provide the structural framework for wooden boats. They support cockpit and cabin soles, and they distribute high load concentrations from engines and other mechanical systems. Often they perform several of these functions simultaneously.

In fiberglass boats, you will find that most often, stringers (and floors) are composed of a core material overlaid with a fiberglass skin. The skin usually extends a few inches on either side of the stringer. This skin extension, or tabbing, ties the stringer to the hull or bulkheads and spreads the load of the stringer over a larger area. Tabbing may be a simple piece of glass tape across the stringer/hull joint, or an integral structural part of the stringer. Some cores are structural, or active, and some are inactive, used primarily to provide a form for a structural fiberglass skin.

Active core stringers, with cores of solid wood or plywood, rely on the structural properties of the wood core itself to provide stiffness. Generally, the more dense the core material (like wood or plywood) the more of the load it is expected to carry. The fiberglass skin covering an active core is primarily used to protect the wood and to attach it to the hull. It is generally thinner than the skin on inactive core. When you replace structural cores, you have to use proper scarf bevels or other proper means of piecing the new core into the old.

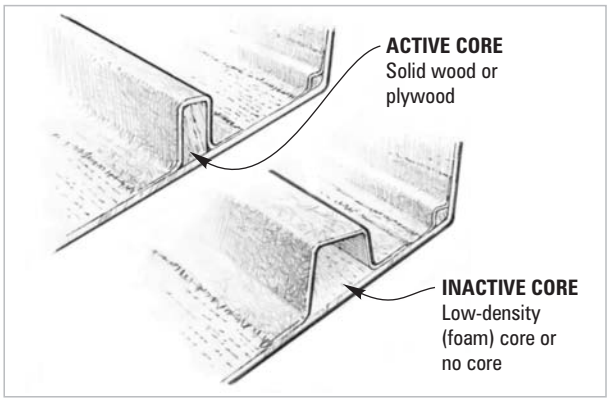

Figure 3-1 *Some cores are structural, or active, and some are inactive, used primarily to provide a form for a structural fiberglass skin.*

Occasionally, you will find a material that appears to be plywood, but all the veneers are oriented in the same direction. You cannot repair this unidirectional material with plywood. Plywood has half the grain running at right angles to the face veneer. It does not have the same strength as unidirectional material. A common example of unidirectional plywood material is called laminated veneer lumber (LVL).

Inactive core stringers rely on the geometry of the fiberglass skins to provide stiffness. The nonstructural cores are primarily forms to give a vertical profile to layers of fiberglass. Inactive cores are made of low-density foam, cardboard tube, or in the case of molded stringers, no core at all. Molded stringers are pre-built in a mold and tabbed in after the hull is built. This type of stringer has no core material, just fairly heavy fiberglass skins to stiffen the hull.

3.0.2 Assessing damaged stringers

Before you start any repair, it is a good idea to know what you are getting into. Looking at the suspected area of damage may be as easy as opening a hatch, but don't count on it. Hull liners or cabin and cockpit soles are common and usually fastened to the very stringers you are trying to fix. It is also difficult to see under engines, water tanks, and the like. You may have to cut access holes in the hull liner or cabin sole to see the area in question. Stringer damage often accompanies sole delamination—See Section 6. Fortunately, you can purchase access covers to fill the holes if there is no stringer damage to repair.

Once you have resigned yourself to cutting holes in your boat, use a mirror and flashlight and look for the following:

Impact damage—Look for obvious fractures in the stringer. Also look for delamination of tabbing and core away from the impact point. Inspect the tabbing where the stringer attaches to a bulkhead or transom.

Rot damage—Wood cores rot from water leaking around fasteners and from water collecting where the fiberglass skin has delaminated. You can often tap the suspected area of stringer with a small hammer. The impact of the hammer has a definite "dead" sound where the core is not firmly attached to the fiberglass.

3.1 Repairing local core damage

For small areas of rot, you may be able to simply dry the stringer and inject epoxy into the rotted area. While this is a common method of wood stringer repair, it is not nearly as effective as replacing the damaged area with wood. Without removing the skin from the wood, it is often difficult to determine the extent of the rot and how wet the core is. Also, the degree of penetration of the injected epoxy cannot be accurately determined so you do not know how good your repair is. If however, you choose to use this method, we recommend the following procedure:

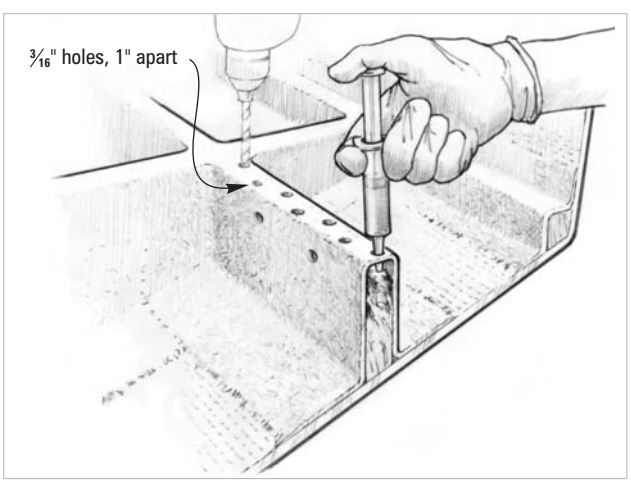

Figure 3-2 *Inject or pour resin/hardener mixture into the holes when the core is dry and while the core is warm.*

1. Drill a pattern of 3/16" diameter holes over the rotted area. Space the holes 1" or less from center to center in all directions. Drill each hole deep enough to pass through the rot, just into solid wood.
2. Dry the core thoroughly. If necessary, use heat guns or fans to accelerate drying.
3. Inject or pour resin/hardener mixture into the holes while the core is warm *(Figure3-2)*. Epoxy, warmed by the core, will become thinner and penetrate more deeply into the exposed end grain. 206 Slow Hardener should penetrate more deeply than 205 Fast Hardener before it begins to gel.
4. Continue to inject epoxy into the holes until the core can no longer absorb epoxy and the voids under the skin are filled.
5. Fill remaining surface voids with thickened epoxy after the injected epoxy reaches its initial cure, if necessary. Use an epoxy/low-density filler mixture for cosmetic fairing of the surface.
6. Apply a layer or two of fiberglass tape or cloth over the stringer to restore stiffness if the damage and hole drilling is extensive.

3.2 Stringer repair guidelines

For more serious repairs that involve removing and replacing stringer material, try to duplicate the original construction. Unless the damage is directly attributable to an undersized stringer, assume that the stringers were structurally adequate and properly located when the boat was originally built. Making a repair that is significantly stronger than the original design can cause hard spots that may distort or crack the hull shell. A repair that is lighter than the original may fail prematurely. When removing and replacing stringer material, observe the following guidelines:

Duplicate the shape and dimensions of the original stringer. Where the stringer is supporting a cockpit sole, cabin sole or engine, the height of the repaired or replaced stringer must be the same as the original. If not, you will have a great deal of difficulty reinstalling the equipment.

Duplicate the original core material or find an equivalent material. Use wood where wood was used, plywood for plywood, foam for foam, etc. Attempt to duplicate the species of wood used in the stringer as well as the dimensions of the wood. You can use a more cavalier approach to replacing low-density core materials than you can for active cores.

Measure the thickness of the fiberglass skin and duplicate it. On stringers with an inactive core or molded stringers (with no core), watch for variations in the skin thickness. Occasionally, the top skin of the stringer is thicker than the side skins. This “cap” can significantly increase the strength and stiffness of the stringer. If the extra thickness is present, try to duplicate it.

Locate new stringers as close as possible to their original position. This is especially true of engine stringers or stringers that support other equipment.

Support the hull. If major stringer replacement is necessary, be sure to support the hull well so the original shape is maintained. Stringers that are removed or have broken away from the hull may allow parts of the hull to sag.

3.3 Replacing active core sections

Often damage to the core of a stringer is limited to a small section, or the stringer may be too difficult to remove. You may be able to replace only the damaged portion, restoring the strength of the stringer while leaving it in position in the boat.

Because the wood in wood cored stringers is structural, any repairs you make to it have to be joined with a proper scarf. If you are replacing a section of plywood stringer, use a minimum of an 8-to-1 scarf bevel. For a 3/4"-thick piece of plywood this equates to a 6" long bevel. When repairing hardwood or highly loaded core areas, use a longer (12-to-1) scarf angle. When cutting

scarfs, keep in mind, the longer the scarf angle, the greater the joint surface area, the stronger the joint. All joints in fiberglass skins should have a minimum 12-to-1 bevel or overlap.

Forming the scarf bevel on the new piece of wood is fairly easy. You can use typical cutting tools with the piece of wood supported on a work bench. Cutting the matching bevel on the wood that remains in the stringer is not as easy. Use chisels, disc grinders, hand planes, hand saws, and any other useful tool available to you to cut wood and fiberglass. The surface of the bevel does not have to be perfect.

1. Cut out the damaged section of the existing stringer. Remove as much skin as necessary to remove all of the damaged core. Trim the exposed core ends to a minimum 8-to-1 scarf angle *(Figure 3-3)*. The scarf may run vertically or horizontally.

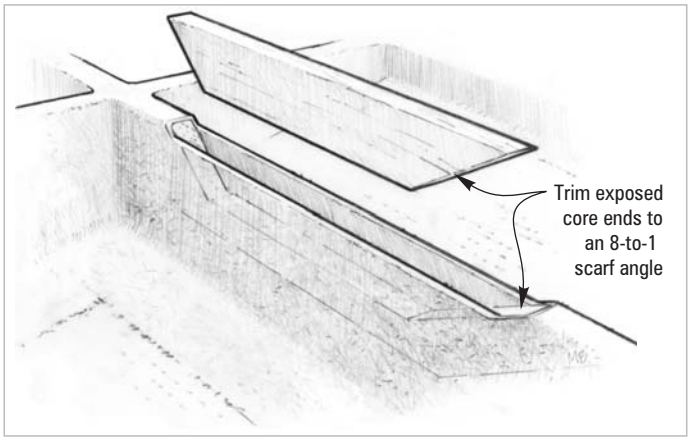

Figure 3-3 *Trim a new piece of core material to fit the size and shape of the void in the existing core. The scarf may run vertically or horizontally.*

2. Prepare for the skin replacement. Prepare both sides of the joint to achieve a good bond
3. Trim a new piece of core material to fit the size and shape of the void in the existing core. Use the same species of wood as the existing core. Cut a matching scarf angle on each end of the new core section. Dry fit and trim the new piece and existing core ends as necessary for a good fit.
4. Prepare the surfaces for bonding. All surfaces should be clean, dry and sanded.
5. Install the new core section. Wet out all contact surfaces of the new and existing core. Apply a liberal amount of thickened epoxy/406 mixture to one side of each contact area. Depending on the fit of the new core, use enough thickened epoxy to bridge all gaps between the two surfaces.
6. Clamp the section in position. Clean up excess epoxy before it cures. Remove clamps after epoxy cures thoroughly.
7. Replace the fiberglass skin as described in Section 3.4.1.

3.4 Replacing stringers

Completely replacing a damaged stringer is often easier than replacing a section. For example, engine stringers commonly run from the transom to a bulkhead. They may not run the entire length of the boat. Complete replacement of the damaged stringer may be much easier than attempting to replace a section of it. Stringers can also be added to under-engineered panels to improve stiffness. Replace stringers as follows:

1. Mark the location of the stringer before you remove it. It is often critical that the stringer gets replaced in exactly the same position it was previously located. Locate reference marks far enough away from the repair area so they will not be disturbed when you prep the area.
2. Remove the stringer and core. Use a grinder to cut the tabbing at the core/hull joint. Do not cut into the hull laminate. Save any large pieces of core you remove if they can be used as pattern to help fit the new core. Measure the thickness of the fiberglass skin so you can duplicate it.

3. Using the same species of wood as the existing core, fit a new piece of core material to fit the size and shape of the core in the removed stringer. See section 3.4.1 for various stringer core construction methods. Dry fit and trim the new piece for a good fit.
4. Prepare the surfaces for bonding. All surfaces should be clean, dry and sanded. Remove any traces of contamination by wiping the surface with solvent and drying with paper towels before the solvent evaporates. Use a degreaser or detergent in areas that may be contaminated with gasoline or oil residue before wiping with solvent. Use a stiff nylon bristle brush on heavily textured surfaces like roving. Abrade the bonding surfaces by sanding with 50-grit sandpaper and brush the area free of dust or loose material. Use a wire brush to abrade heavily textured surfaces. The bonding surface should appear dull. Sand the bonding surfaces of hardwood or epoxy coated stringers with 50-grit sandpaper.
5. Wet out all contact surfaces of the hull and core with epoxy. Apply a liberal amount of thickened epoxy/404 High-Density or 406 Colloidal Silica mixture to one side of the contact area.

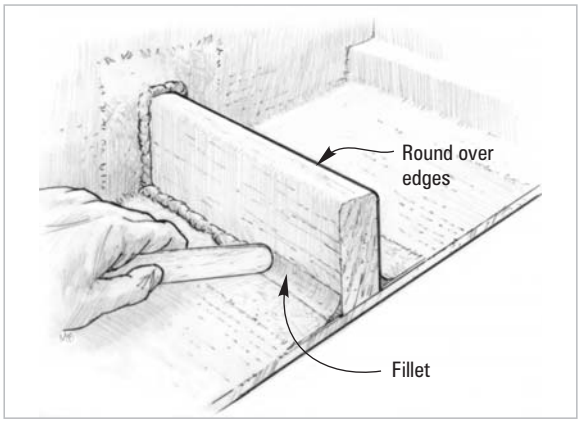

Figure 3-4 *Epoxy mixture should squeeze out of the joint. Shape the squeezed out epoxy into a fillet.*

6. Push the stringer in position with firm hand pressure. Thickened epoxy should squeeze out of the joint. Brace or tape the stringer in position as necessary.
7. Shape the squeezed out epoxy into a fillet. Apply additional thickened epoxy to the joint if necessary for a smooth ½" radius fillet. Clean up excess epoxy before it cures. Remove clamps after epoxy cures thoroughly.
8. Replace the fiberglass skin as described in 3.5.

3.4.1 Applying the fiberglass skin

After repairing or replacing core material, it is necessary to replace the fiberglass skin and tab the stringer to the hull. To duplicate the strength of the original skin, it is important to duplicate the thickness of the original skin and to properly prepare the surfaces for a good bond.

Preparing the fiberglass fabric

Measure the thickness of the skin on the original stringer. Keep in mind, the top skin may be thicker than the sides and the tabbing. Refer to the chart in Appendix A to determine the number of layers of a particular weight fabric necessary to achieve the thickness required.

Cut the necessary number of strips of fiberglass fabric the length of the stringer. Cut the first piece large enough to extend as far as the original tabbing from each side of the stringer. Cut each of the remaining pieces 1" (½" each side) narrower than the previous one. When laying out the layers of fabric, do not allow the tabbing edges to end at the same place. For stress reduction, step the edges of the fabric to create a tapered edge. If you fail to do this, all the load the stringer is carrying will be transferred to the line on the hull's surface where the tabbing ends and the hull may crack at that point. If, however, you step the tabbing edges, the load from the stringer is gradually distributed to the hull. Where stringers end at a bulkhead or the transom, wrap the glass tabbing onto them in the same manner.

WEST SYSTEM 738 Fabric is ideal for stringer repairs. It yields about 0.040" per layer in a hand lamination, so you will need fewer layers of cloth to achieve the necessary thickness for most stringers. Fewer layers of fabric translates into less labor to install it. There is however, nothing wrong with using a lighter fabric. It will require more layers per unit of laminate thickness and thus more time to install it. Structurally, there is little difference between 5 layers of 24 oz. fabric or 10 layers of 12 oz. fabric.

Preparing surfaces for bonding

Surface preparation for bonding is a critical part of any repair. The bilge of a boat can be very difficult to prepare for bonding, because it is likely to be contaminated (especially around engines) and many areas may be inaccessible.

Use a degreaser or detergent in areas that may be contaminated with gasoline or oil residue before wiping with solvent. Use a stiff brush on heavily textured surfaces like roving. Remove any traces of contamination by wiping the surface with solvent and drying with paper towels before the solvent evaporates.

Use a 50-grit grinding disc to prepare the surface. A 50-grit disc cuts quickly with little heat build-up. If gelcoat is present and it is soundly attached, you do not need to remove it. Grind it to create a fresh, no-gloss surface. Brush the area free of dust or loose material. Use a wire brush to abrade heavily textured surfaces. The bonding surface should appear dull.

A 12-to-1 bevel must be ground into any existing fiberglass left on a stringer. The new fiberglass will run onto this bevel attaching the new material to the original material. A 12-to-1 bevel provides adequate surface area for the transfer of loads across the repair area. For example, if the skin on the original portion of the stringer is ¼"-thick, the bevel needs to be 12 × ¼" or 3" wide.

It is difficult to lay fiberglass cloth around a sharp 90° corner. You have to round over the top edges of the cores and fillet the core/hull and core/bulkhead inside corners—a ⅜" radius for thinner fabric, ½" radius for thicker fabric.

Applying the fiberglass skin

1. Prepare fiberglass fabric and bonding surfaces as described above.
2. Wet out the entire bonding surface, including the stringer, with a mixture of resin/hardener. Squeegee a thin layer of thickened epoxy over the exposed panel bonding area if the surface is heavily textured. Mix epoxy/404 High-Density or 406 Colloidal Silica filler to the consistency of mayonnaise. The thickened epoxy will fill voids on the surface and provide better contact with the first layer of fabric.
3. Center the largest piece of fabric over the stringer and reinforcement area and wet it out with the resin/hardener mixture. Squeegee any excess epoxy from the surface, making sure the entire piece of fabric has been saturated.

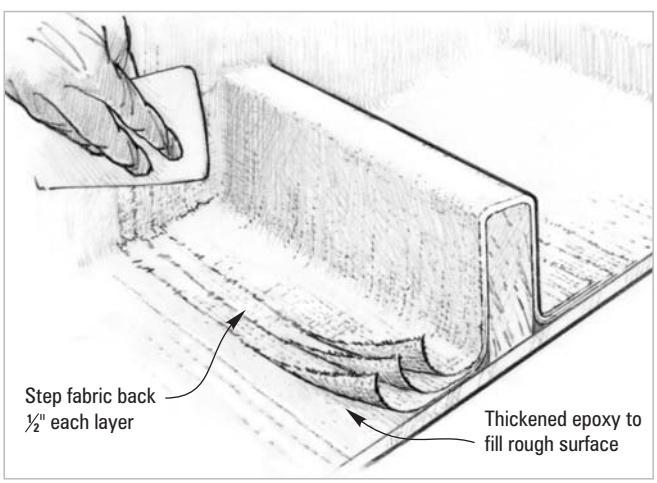

Figure 3-5 *Cut each of the remaining pieces 1" (½" each side) narrower than the previous one. Squeegee any excess epoxy from the surface, but make sure the entire piece of fabric has been saturated.*

4. Apply each successive piece of fabric in the same manner. Successive pieces may be applied immediately after the previous piece or any time before the previous piece becomes tack free. The fabric edges should be stepped, with the last piece extending about 1¾" to 2¼" from each side of the stringer (depending on the number of fabric layers). Allow the lay-up to reach its initial cure.
5. Apply two or three coats of epoxy to fill the weave of the cloth. To avoid sanding between coats, apply each coat before the previous coat becomes tack free. Allow the final coat to cure thoroughly.

   Note: The final two or three coats may be tinted with WEST SYSTEM 501 (white) or 503 (gray) pigment or with 420 Aluminum Powder (gray) or 423 Graphite Powder (black). If you desire a smoother cosmetic finish, the lay-up may be faired and finished.

When your repair is complete, you will have a little additional finishing work to do. Fiberglass repairs inevitably have some sharp edges or sharp "hairs" sticking out. These make cleaning the bilge difficult, if not downright dangerous. Use 80-grit sand paper to eliminate imperfections that might cut you.

You have a couple of options for final finishing:

1—Do nothing. Since most of the work is in the bilge area, you do not need to apply a final finish. UV degradation of the epoxy will not be a problem and in many circumstances, the appearance of the repair does not matter.

2—Paint the repair. If the appearance of the repair matters, select a paint color that matches the rest of the area and paint the repair. Proper surface preparation of the repair includes washing with water and thoroughly sanding the epoxy surface *(Section 9.4.7—Final surface preparation)*. Apply a paint primer or apply the topcoat directly to the prepared epoxy.

As always, when you're installing any hardware, use epoxy to seal all holes you drill. If you neglect this step, you will likely have another repair job in a few years when the core material rots.

3.5 Reinforcing to improve panel stiffness

Small cracks and flaws in panels can be a result of high-stress concentrations and flexing within a panel. A common example of this problem is hairline cracking around the perimeter of a foredeck, usually the result of the deck's flexing under load. Similarly, a lightly-built hull may experience considerable flexing as it pounds through waves, resulting in cracks around bulkheads. In the flatter bow areas, panel flexing or "oil-canning" often results in gelcoat crazing. Such deflections can be controlled by reinforcing these panels using WEST SYSTEM epoxy. Panels can be reinforced by adding fiberglass, core material and fiberglass or stringers, with or without fiberglass. Some of these reinforcing methods can be further improved with the use of graphite fibers.

3.5.1 Reinforcing with fabric

Perhaps one of the simplest methods of reinforcing a large area, particularly the hull, is to laminate layers of fiberglass fabric to the interior surface of the hull or deck to increase the thickness of the laminate. Bonding layers of fiberglass fabric to a panel is covered in Section 9.4.5—*Applying woven cloth & tape*. Multiple layers of fabric may be applied one after the other or before the previous layer has become tack free. Step each layer back from the previous layer (progressively smaller layers) to avoid stress concentrations at the edge of the stiffer area.

3.5.2 Reinforcing with fabric and core material

As noted in the introduction, doubling the thickness of a laminate will increase its stiffness by eight times. Bonding a core material between the fiberglass fabric and the interior of a panel is a good way to increase stiffness with a minimum amount of added weight. Either end-grained balsa or a rigid, closed-cell foam are good choices for a core material. This method of reinforcement is useful over large areas with good access to the interior side of the panel.

Stiffen a flexible panel by bonding core material and fiberglass fabric to the inner side of the panel. Bond the core in place as follows:

1. Prepare the surface for bonding. Remove any traces of contamination by wiping the surface with solvent and drying with paper towels before the solvent evaporates. Use a degreaser or detergent in areas that may be contaminated with gasoline or oil residue before wiping with solvent. Use a stiff nylon bristle brush on heavily textured surfaces like roving.
2. Abrade the bonding surface by sanding with 50-grit sandpaper and brush the area free of dust or loose material. Use a wire brush to abrade heavily textured surfaces. The bonding surface should appear dull.
3. Prepare the core material and fabric. Cut the core material to size. Round the corners and bevel the edges of the core material to reduce stress concentrations. Cut four or five pieces of fiberglass cloth, each piece an inch or two shorter on each side than the one before. The smallest piece of fabric should overlap the core material by 2" (5cm) on each side *(Figure 3-6)*.

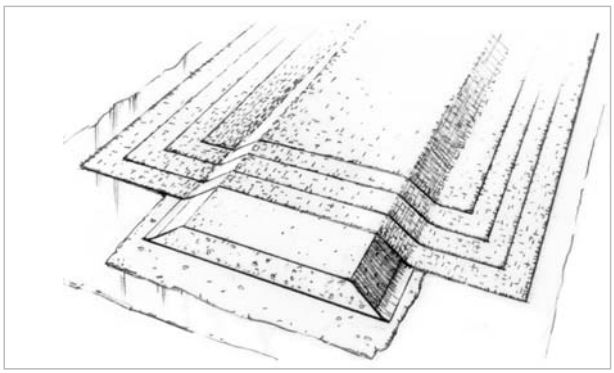

Figure 3-6 *End-grained balsa or high-density foam core material is useful for reinforcing large panel areas.*

4. Wet out the core and panel bonding surfaces with resin/hardener mixture.
5. Apply an epoxy/adhesive filler mixture, thickened to the consistency of mayonnaise, to the bonding surface of the core material. Place the core in position on the panel to be reinforced. Use enough clamping pressure to hold the piece in place, squeezing just a little of the mixture from the joint. Use braces and wedges to clamp the core in position. Try to achieve uniform clamping pressure and avoid any gaps between the core and the panel. Shape the excess epoxy mixture into a fillet at the core/panel joint before it hardens. Allow the epoxy to cure before removing clamping.

   Bond the fiberglass fabric to the core and panel as follows:
6. Wet out the bonding surface of the core material and panel with a mixture of resin/hardener. Squeegee a thin layer of thickened epoxy over the core and exposed panel bonding area if the surface is heavily textured. Thicken the epoxy with 404 or 406 filler to the consistency of mayonnaise. The thickened epoxy will fill voids on the surface and provide better contact with the first layer of cloth.
7. Center the largest piece of fiberglass fabric over the reinforcement area and wet it out with epoxy. You may find it helpful to hold the fabric in place with pieces of masking tape. Squeegee any excess epoxy from the surface, but make sure the entire piece of cloth has been saturated.
8. Apply each successive piece of cloth in the same manner. Each piece may be applied immediately after the previous piece is applied or any time before the previous piece reaches its final cure. The final piece should extend beyond the core at least 2" on each side.
9. Allow the lay-up to reach its initial cure. Apply two or three coats of epoxy before the lay-up reaches its final cure. Apply each coat before the previous coat reaches its final cure, and allow the final coat to cure thoroughly. Note: The final two or three coats may be tinted with WEST SYSTEM 501 (white) or 503 (gray) pigment or with 420 Aluminum Powder (gray) or 423 Graphite Powder (black).

If you desire a smoother cosmetic finish, the lay-up may be faired and finished. Follow the fairing instructions in Section 9.4.5—*Using WEST SYSTEM Epoxy* and the finishing instructions in Section 2. Note: Vacuum bagging is an ideal clamping method for large bonding areas such as this. *Refer to* ***002-150 Vacuum Bagging Techniques****, published by West System for detailed information on vacuum bagging.*

3.5.3 Reinforcing with stringers

One of the advantages of using wood for stringers is that most of the stiffness comes from the wood itself, so you need to rely less on additional fiberglass fabric for strength.

Solid wood and plywood

Plywood or solid wood stringers can be cut to shape with a band or table saw. The end of each stringer should either butt into a bulkhead or a floor, or should be tapered to the surface with at least a 4-to-1 slope. Failure to do this will result in hard spots, causing stress fractures or cracking.

The stringer cross sections are generally rectangular or square, although a trapezoid is a good selection if you are using solid wood. The trapezoid has a wide base for load distribution, narrowing at the top to offer less weight. If fiberglass fabric is to be applied over the stringer, the trapezoid shape allows easier fiberglass fabric application *(Figure 3-7)*. The upper edges should be rounded to eliminate sharp corners.

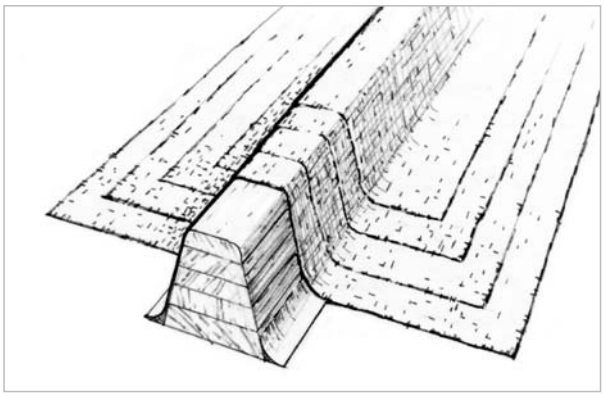

Figure 3-7 *Laminated or solid wooden stringers provide effective panel reinforcement with or without the addition of fiberglass fabric.*

Install new stringers as described in section 3.4. Apply fiberglass fabric over the stringers as described in section 3.5.

Laminated wooden stringers

Laminated stringers have structural advantages over cut stringers, especially in curved areas. Laminated stringers are made of multiple thin layers of wood and can duplicate the shape of the inner side of the panel. More of the wood grain in the stringer follows the shape of the panel, making laminated frames stronger. The new frame can be laminated in a simple jig made from a pattern or, in some cases, directly in place on the back of the panel.

When preparing wood for laminated stringers—

- Use wood strips thin enough to bend easily into the shape of the panel. Be sure all of the strips collectively can bend to shape. Thick strips want to relax or springback.
- For a curved frame with greater strength and less springback, use more, thinner strips for a given stringer thickness.
- Use full-length strips. Make the strips longer than the finished stringer to allow for trimming.
- Select wood strips that are seasoned. Ideal moisture content is 6% to 14%.

A laminating jig will allow you to laminate a new frame in the controlled environment of your shop. Use cardboard or other convenient material to pattern the inside face of the panel at the

stringer locations. Transfer the pattern line to a laminating jig of one the types illustrated *(Figure 3-8)*. Laminate frames in a jig as follows:

1. Prepare the jig and the strips as suggested. Go through a dry run to be sure the strips bend enough and that your jig and clamps can handle the bending of all of the strips. Cover the jig with plastic to prevent the frame from bonding to the jig.
2. Wet out the strips on both sides with epoxy, except for the outer faces of the top and bottom strip.
3. Apply thickened epoxy to one side of each strip and stack it in place on the jig against the previously coated strip. Thicken the mixture with 406 filler to a catsup consistency. Be sure that one side coated with thickened epoxy faces each joint.

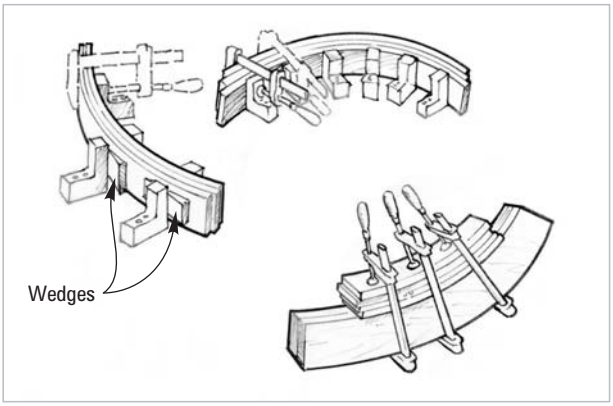

Figure 3-8 *Transfer the desired stringer profile to a laminating jig.*

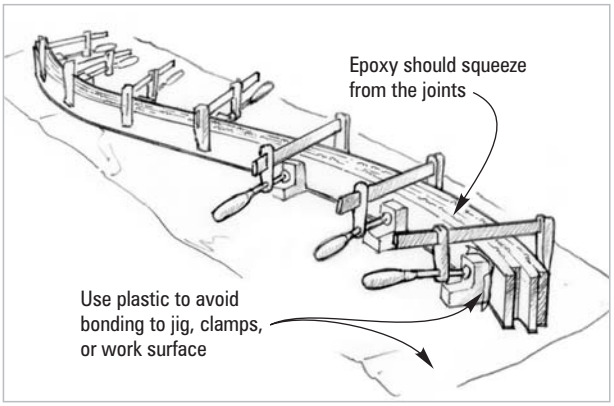

Figure 3-9 *Clamp the appropriate number of coated strips into the jig. Trim the stringer to size after the epoxy is fully*

4. Clamp the strips to the jig until the epoxy cures *(Figure 3-9)*. Use clamps, wedges, staples or small nails to apply enough pressure to squeeze a small amount of epoxy from each joint.
5. Remove the stringer from the jig after the epoxy has thoroughly cured. Be sure to allow extra cure time if the temperature is cool, especially if you expect a lot of springback. Trim laminated stringers to final shape.

   Install new stringers as described in section 3.4. Apply fiberglass fabric over the stringers as described in section 3.5. If you have added stringers to an exposed interior area, you may not want to or need to apply fiberglass over them. Wood stringers, especially the laminated type, can enhance the appearance of your boat's interior. They provide a nice touch when varnished, while they serve their primary function of reinforcement. If you choose to coat the stringers, sand the stringers and fillets to prepare for bonding. Apply two or three coats of epoxy to seal the stringer. Allow the final coat to cure thoroughly.

Half-round and foam cores

Half-round or foam reinforcements with a fiberglass skin are a simple way of strengthening panels. With this method, the core material primarily serves as a form and the laminated fiberglass fabric provides the stiffening strength.

For light-duty applications, an economical core material for this method of reinforcement is a cardboard or paper tube cut in half lengthwise. Pieces can be placed end to end to reinforce larger areas. The tube should be heavy enough to hold its shape during the lay-up and cure of the fabric laminate. Low-density foam also makes an economical core material. Cut the foam on a table or band saw to a trapezoid shaped cross section. The trapezoidal cross section is more effective than the half-round cross section because it places more reinforcing fibers on the top of the stringer, away from the stringer's neutral axis. Cut a 4-to-1 bevel on ends that fall in the middle of a panel. Sand a ⅜" radius on the top edges.

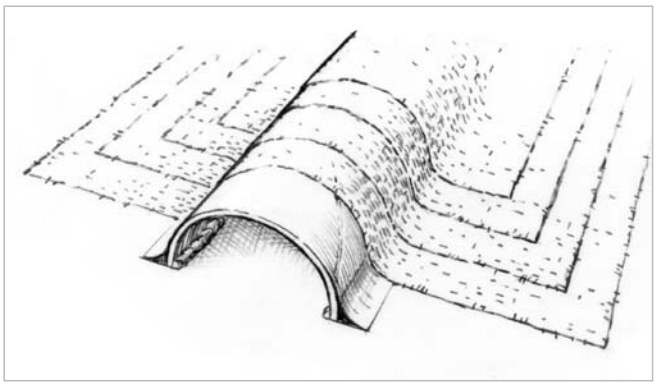

Figure 3-10 *The half-round material serves as a form for the laminated fiberglass fabric, that provides the stiffness.*

To bond half-round tubes—Apply a ¼" (6mm) bead of thickened epoxy mixture to the outlined edge of the bonding surface. Mix epoxy/404 or 406 filler to the consistency of peanut butter. Place the tube/stringer in position in the thickened epoxy beads. The epoxy mixture should hold it in place. Shape the epoxy bead on the outside of the stringer/panel joint into a fillet. Apply additional thickened epoxy to the joint if necessary for a smooth ½" radius fillet. If necessary, brace or tape the stringer in position until the epoxy reaches an initial cure. Apply fiberglass fabric as described in Section 3.5. Remember, more layers of fiberglass reinforcing are required over inactive cores.

3.5.4 Reinforcing with unidirectional fibers

The stiffness of reinforcement stringers can be significantly improved with little weight gain by applying unidirectional fiberglass or carbon (graphite) fibers tape along the top side of the stringer facing away from the panel. When applied to the top of the stringer, where tensile loads are highest, all of the fibers can be oriented parallel to the load. Carbon fiber is more costly than fiberglass, but savings in weight and bulk for the same amount of stiffening may offset carbon's additional cost. *Refer to Section 9.4.6—Applying Woven Cloth and Tape, for application procedures.*

Recommended Reading: ***Upgrading the Cruising Sailboat*** *by Daniel Spurr (Seven Seas Press, Inc., Newport, RI), an excellent, in-depth discussion of strengthening the hull and deck.* ■

4 Repairing Damaged Skins

Cut through a fiberglass boat's hull or deck and you will find either a non-cored (single skin) or a cored laminate (two skins sandwiching a lower density core material). Often a panel changes from cored to non-cored at corners, at the ends of panels and at panel openings. Depending on the size of the boat and the location of the damage, a structural repair could involve either or both types of laminate.

Whether cored or non-cored, the structure of a fiberglass boat relies on the continuity of the fibers that run through its skins. Damage from impact, abrasion, flexing or even deterioration of the resin holding the fibers in place can reduce or eliminate the load carrying ability of these fibers. The objective of the repair procedures in this section is to restore skin continuity by rebuilding the load carrying ability of the fibers through the damaged area of the skin.

The repair procedures for cores and core related damage are discussed in Section 4.

Typical fiberglass skin

Below an outer layer of gelcoat and chopped-strand mat, a typical fiberglass skin is comprised of alternating layers of woven roving and more chopped-strand mat, repeated until a required thickness is reached. In a cored panel, the schedule is similar, but the inner and outer skin are generally much thinner than a single, non-cored panel *(Figure 1-1)*. Some of the newer structures being manufactured today may include layers of unidirectional or multidirectional glass, aramid or graphite fibers. The fabric is usually bonded together with an isophthalic or orthophthalic polyester resin, although vinylester resins are being used more frequently in place of polyester resins.

Restoring skin continuity

Skin continuity can be restored if enough fibers can be bonded across a damaged area to equal the strength of those that were damaged or removed. The lay-up schedule for your repair work should duplicate thickness and types of materials used in that area as closely as possible. However, heavy woven roving may be replaced by more layers of lighter weight woven or bidirectional fabrics. Although more layers may mean extra work, lighter weight fabrics are often easier to find and their tighter weave results in a higher fiber to resin ratio, which can result in a repair that is actually stronger than the original panel.

As a general rule, the bonding area of the repair patch should be 12 times the thickness of the damaged skin, on each side of the damage. To maintain the necessary bonding area and keep the repair flush with the surface, the edges of the repair area are beveled to a 12-to-1 angle and each piece of repair fabric is cut progressively smaller. The bevel provides the proper bonding area and also allows the patch to be bonded below the surface where it can be faired flush with the surface.

4.1 Assessing and preparing the damaged area

Begin with a thorough inspection of the damaged area to determine the depth and extent of the repair required. If accessible, examine the back of the panel. An abrasion or flex crack that extends into the roving layers will affect the skin's strength even if the damage does not extend

completely through the laminate. Cracks that are visible on the back side of a panel indicate that the fibers running through the area have lost their ability to carry their load and are structurally the same as a hole through the panel. Be sure to inspect internal structural members and hardware, too. An impact can cause panels to flex inward enough to damage adjoining bulkheads or frames. Check for excessive flexing or panel movement. If movement is evident, reinforce the panel after the damage has been repaired as outlined in Section 3.

1. Remove all of the damaged material. Use a grinder to cut down to solid laminate or a saw to enlarge a hole to solid undamaged laminate. While you're removing the damaged material, try to maintain a circular or oval shape. The laminate around an impact site may be structurally damaged beyond the area of visible damage. Tap around the damaged area with a small hammer or metal object. Soft- or dull-sounding areas indicate a void or fracture under the surface that should be exposed.

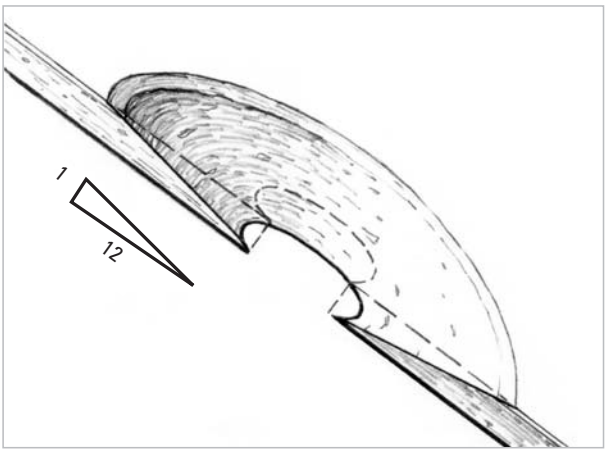

Figure 4-1 *Grind a minimum 12-to-1 bevel around the edge of the excavated hole, whether the damage extends partially or completely through the skin.*

2. Grind a bevel around the edge of the repair area to create a bonding area for the patch that will keep the patch flush with the skin's surface. A minimum 12-to-1 bevel is required to assure the transfer of loads across the repair area *(Figure 4-1)*. For example, if you are left with a hole through a ¼" (6mm)-thick laminate, the outer edge of the bevel will extend 3" (75mm) from the inside edge of the hole. If the skin is very thin, a longer bevel angle is required.

   Proceed with the laminating of the repair patch as described in Section 4.3 if:
   a.—you have reached solid, undamaged laminate without grinding through the skin.
   b.—the hole through the skin of a non-cored panel is smaller than about 1" diameter.
   c.—the hole through the outer skin of a cored panel reveals undamaged core material.

   Provide backing to support the lay up of the repair patch as described in Section 4.2 if:
   a.—the hole through a non-cored panel is larger than about 1" in diameter.
   b.—the hole through the inner skin of a cored panel is larger than about 1" in diameter.

4.2 Backing a repair patch

If the hole through the skin is larger than about 1", a backing will be required to support the wet-out fabric patch in the shape of the panel until the patch cures. Applying a support to the back of a panel is generally not a problem if you have access to the inside of the damaged panel. But, if your boat has a fiberglass liner or if the back of the hole is inaccessible, an alternative method must be used. Several methods for backing are suggested in this manual. Use the method, or a modification of one that is most appropriate for your situation. If you are using vacuum bagging to laminate the patch, an air-tight backing is necessary for all holes.

Suggested backing supports for cored panels, with and without back access, will be discussed in Section 5. The following are suggested backing supports for non-cored panels with and without access to the back of the panel.

4.2.1 Temporary backing support–with inside access

If the hole is in an exposed interior area, the following backing method will leave the repair flush with the inner surface for easy fairing and finishing when the repair is complete.

1. Cut a piece of Styrofoam™ or similar material slightly larger than the hole you will be patching. Shape the foam as necessary to match the contour of the repair area if the panel is curved more than the foam can bend. The foam should make contact at the edges of the hole.

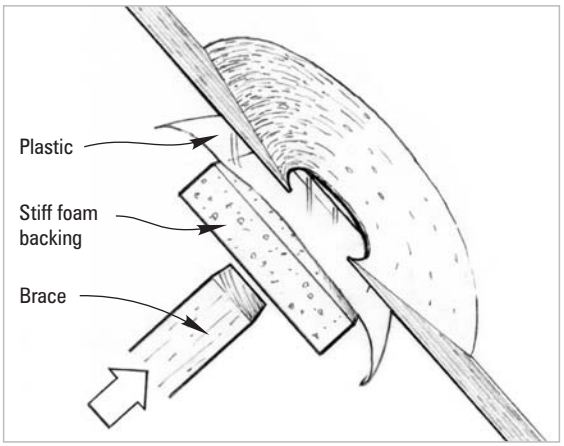

Figure 4-2 *A temporary backing support should fit tight against the inside of the panel and match the panel contour.*

2. Cover the backing support with a piece of plastic and brace it against the hole from the inside. The plastic will help seal the hole and prevent the patch from bonding to the foam backing. Looking at the hole from the outside, the foam should be in contact with the edges of the opening and the plastic should be smooth and tight.
   Cover the plastic with a piece of release fabric before placing the support over the hole if you prefer to leave the inner surface of the patch textured and ready for finishing.
3. With the backing support in position, laminate the repair patch as described in Section 4.3. When the repair patch has cured, remove the brace and foam. Peel the plastic and release fabric from the repair area. Fair and finish the interior side of the panel as desired.

4.2.2 Backing supports–without access

If you don't have access to the inside of the panel, the following method is designed to provide support for the repair patch by bonding a thin backer to the back of the panel from the outside of the panel. The backing will become a permanent part of the panel. Although the installation method and backing material can be altered depending on the size and curve of the repair area, the method described below can accommodate the widest range of openings. This type of backing may also be applied from the back of the panel if you have access and the permanent backing on the interior of the panel is not objectionable.

The first part of this method describes laminating a backer to match a specific opening. The second part describes slipping the backer through the hole and bonding it in place on the back of the panel.

Laminating a backing support

1. Select and tape off an area of the panel next to and several inches larger than the hole opening to act as a mold for the lay up of the backing. Mask the area outside of the tape to protect from epoxy spills. Apply a liberal coat of automobile paste wax or release agent to the mold area. The selected area should match the curve or contour of the repair area.
2. Cut two pieces of 6 oz (203g/sq m) fiberglass fabric the size of the waxed area. Add one piece of cloth for every 12" increase in hole diameter over 12". Lay the cloth on a plastic protected work table.

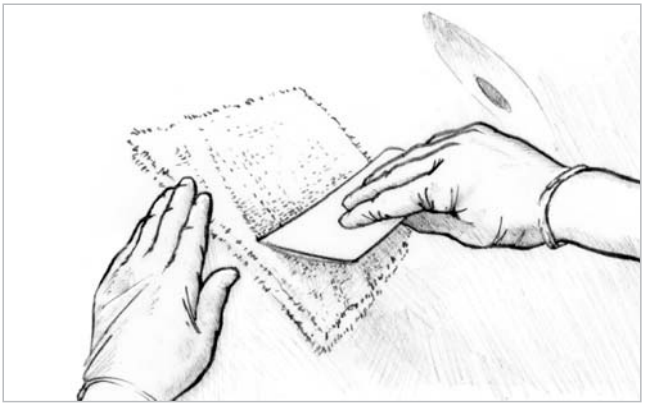

Figure 4-3 *Smooth the wet-out fabric against the waxed panel to laminate a backer that matches the panel contour.*

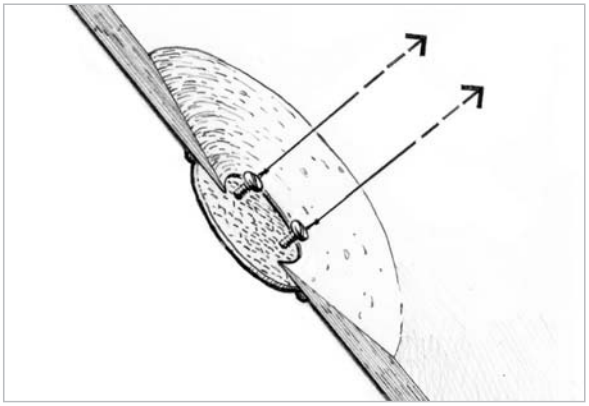

Figure 4-4 *Pull the backer tight against the inside of the panel to permanently bond the backer in position.*

3. Wet-out the layers of fabric with epoxy. Pour a small amount of resin/hardener mixture in the middle of the cloth. Use a plastic spreader to spread the mixture over the cloth until both layers are completely saturated.
4. Place the wet-out fabric against the waxed panel *(Figure 4-3)*. Use a spreader to smooth the cloth against the panel and remove excess epoxy. The paste wax will prevent the cloth from becoming bonded to the panel. If the hole is in a flat or moderately curved area of the panel, the backer can be laminated on the flat table. The cured backer should be flexible enough to conform to a moderately curved panel. Allow the backer to cure thoroughly.
5. Peel the cured backer laminate from the panel (or table). Using a utility knife or scissors, trim the laminated backer to the shape of the hole, 1" larger than the hole on all sides. To help handle and hold the backer in position when bonding, screw two or more sheet metal screws into the laminate and attach a length of heavy string or wire to each screw. The string will also help retrieve the laminate if you accidentally drop it behind the panel.

Bonding the backer in place

1. Prepare the inside of the opening for bonding. Reach through the opening and sand the inside edge of the hole thoroughly with 50-grit sandpaper.
2. Bend the laminate slightly so that you can pass it through the opening using the string to keep it from dropping.
   Note: Grind the hole and trim the backer to an oval shape rather than a round shape. An oval shape will allow the narrower dimension of the oversized backer to pass through the wider dimension of the smaller hole without having to flex the backer.
3. Bond the backer in place with a quick setting adhesive like G/5 Five-Minute Adhesive available from West System. Apply adhesive to the inside edge of the hole and to the edge of the laminate. A thickened epoxy/high-density filler mixture will work if a quick curing adhesive is not available.
4. Pull the backer into position on the inside of the panel and tie off the strings to a stationary object close to the hole or a stick laid across the hole *(Figure 4-4)*. Keep enough tension on the strings to hold the backer in position and bend the backer as necessary to match the contour of the panel. Some of the epoxy mixture should squeeze out of the joint. Scrape away the excess and smooth the joint before it begins to cure. Allow the epoxy to cure thoroughly before removing the screws.
5. Proceed with laminating the repair patch as described in Section 4.3.
   The method just described works well on compound curved sections or corners. In many smaller or flat areas, other material like plastic laminate can work as a backer, as long as the patch holds the proper panel shape until it cures.

If you intend to vacuum bag the repair patch, this backing method provides a good air-tight seal and should be used, even if you have access to the back of the panel. Be sure to fill the screw holes with thickened epoxy before laminating the patch. Refer to Section 4.3.3 for information on vacuum bagging for repair.

4.3 Laminating a repair patch

The new skin must be laminated to approximately the same thickness to assure the strength of the original skin. Multiple layers of lightweight cloth will develop the same or greater strength than a single layer of heavy cloth.

The patch can be laminated by either of two methods, depending on the size of the patch. For ***large areas*** it's easier to handle and lay up each piece of cloth one piece at a time. For ***smaller areas*** it may be more convenient to wet out and lay up all of the pieces together.

4.3.1 Large area patch

1. Cut an appropriate number of pieces of fiberglass fabric the same shape as the hole. The first piece should match the outside edge of the bevel, with subsequent pieces gradually getting smaller. The final layer should match the inside edge of the bevel at the hole. The combined thickness of the layers should be slightly thinner than the original panel to allow for shaping and fairing *(Figure 4-5)*.
2. Wet out and apply a layer of thickened epoxy to the beveled edge of the hole and to the backing piece to fill voids and provide good contact between the surface and the first layer of cloth. Thicken the mixture with 404 or 406 filler to the consistency of catsup and apply it with a disposable brush.
3. Lay the fabric in position on the repair area. Use a plastic spreader to smooth the cloth and remove trapped air.

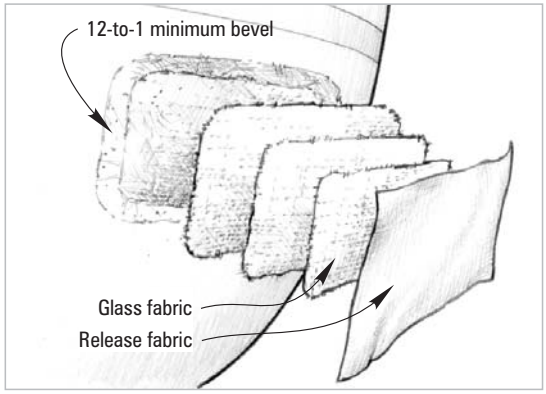

Figure 4-5 *Cut an appropriate number of pieces of fiberglass fabric. The first piece should match the outside edge of the bevel.*

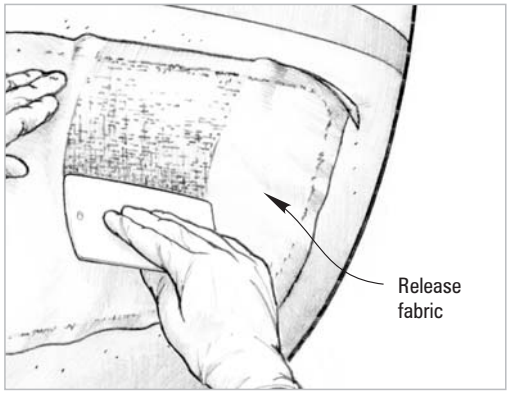

Figure 4-6 *Squeegee over the release fabric with firm pressure to remove excess epoxy and smooth the patch.*

4. Wet out the fabric. Use a plastic spreader or roller to spread the epoxy and saturate all areas of the fabric.
5. Repeat the process for each layer of fabric until you have bonded the smallest piece in place last, centered over the hole. By bonding the patch into place in a large-to-small-piece sequence, you will eliminate the possibility of sanding through any of the cloth layers when fairing the surface.
6. Apply epoxy fairing compound (epoxy thickened with 407 or 410 filler) over the repair when epoxy/fiberglass patch begins to gel. Apply the fairing compound when the epoxy is still tacky. Refer to Section 9.4.4 for fairing details.

An optional method is to finish the repair in two stages. Cut a piece of release fabric several inches larger than the patch and smooth it in place over the patch. Squeegee over the release fabric with firm pressure to remove excess epoxy and smooth the patch *(Figure 4-6)*. Before the epoxy cures, remove the excess from the surrounding areas with a beveled mixing stick or paper towel. Allow the patch to cure thoroughly.

Remove the release fabric. Release fabric will not bond to the epoxy and will leave a smooth textured surface. Sand to remove any high spots. Fair the repair as described in Section 9.4.4. Finish the repair as described in Section 2.2.

4.3.2 Small area patch

If the patch area is smaller than about 8" (20cm) on a side, it may be easier to prepare the entire patch first on a piece of plastic placed on a flat surface. The patch can then be bonded into the hole cavity in one operation.

1. Cut an appropriate number of pieces of fiberglass fabric the same shape as the hole. The first piece should match the outside edge of the bevel, with subsequent pieces gradually getting smaller. The final layer should match the inside edge of the bevel. The combined thickness of the layers should be slightly thinner than the original panel to allow for shaping and fairing.
2. Cut a piece of plastic and a piece of release fabric several inches larger than the patch area. Place the plastic on the working surface, followed by the release fabric.
3. Wet out each piece of fabric with epoxy and stack the fiberglass cloth pieces on the working surface beginning with the smallest piece and finishing with the largest. Center each layer over the previous layer. You will end up with a plug of wet-out fabric approximately the size, shape and depth of the hole *(Figure 4-7)*.
4. Wet out and apply a layer of thickened epoxy to the beveled edge of the hole and to the backing piece to fill voids and provide good contact between the surface and the first layer of cloth. Thicken the mixture with 404 or 406 filler to the consistency of catsup and apply it with a disposable brush.

Figure 4-7 *Build up a plug of wet-out fabric approximately the size, shape and depth of the hole.*

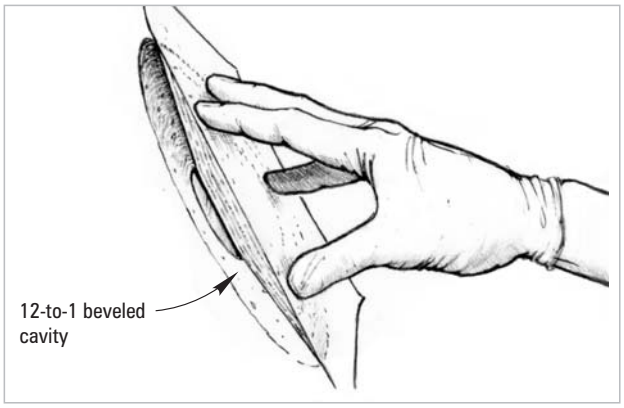

Figure 4-8 *Press the wet-out patch, release fabric and plastic into the beveled hole cavity. Squeegee over the patch to remove excess epoxy and trapped air.*

5. Lift the wet-out patch, release fabric and plastic from the work surface and press it, plastic side out, into the beveled hole cavity *(Figure 4-8)*. Squeegee over the plastic with firm pressure to remove excess epoxy and trapped air, and smooth the patch. Before the epoxy cures, remove the excess from the surrounding areas with a beveled mixing stick or paper towel.
6. Allow the patch to cure thoroughly and remove the release fabric.
   Sand to remove any high spots. Fair the repair as described in Section 9.4.4—*Using WEST SYSTEM Epoxy*. Finish the repair as described in Section 2.2.

4.3.3 Vacuum bagging

Vacuum bagging is a clamping method that uses atmospheric pressure to apply even clamping pressure to a laminate or, in this case, the repair patch. For most repair situations vacuum bagging is not necessary for a sound repair. Vacuum bagging is useful in situations where compaction of the laminate is required, as in lightweight or high-performance structures. It is also useful is situations where conventional clamping is not practical—when bonding large areas of core material for example.

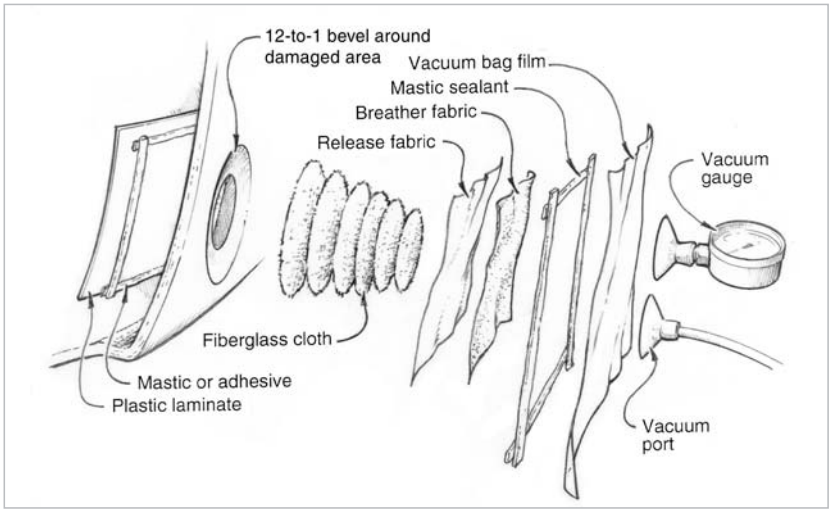

Figure 4-9 *Smooth the patch and the release fabric in place. Lay the vacuum bag material over the patch, seal the bag and attach vacuum lines.*

The lay up procedure for vacuum bagging a small repair is the same as for the repair described above, except for the following steps:

1. Prepare all vacuum bagging materials before mixing epoxy.
2. Apply a continuous strip of vacuum bag sealant around the perimeter of the repair area before mixing epoxy.
3. Laminate the repair patch following either of the above procedures.
4. After smoothing the patch and release fabric in place, lay the vacuum bag material over the patch *(Figure 4-9)*. Remove the protective paper from the vacuum bag sealant and press the bag into the sealant around the perimeter. The lay-up must be airtight. Seal off scored or porous core material or delaminated skin and core with epoxy.
5. Attach the vacuum lines and pump. Begin applying vacuum pressure before the epoxy begins to cure. Check for air leaks through the back patch and around the mastic sealant. Maintain vacuum pressure until the epoxy is cured. Remove the vacuum bag and release fabric. Sand to remove any high spots. Fair the repair as described in Section 9.4.4. Finish the repair as described in Section 2.2. ■

5 Repairing Core Related Damage

As mentioned in Section 1, the core material separating the two skins of a cored panel reduces the tensile and compressive loads on the skins and allows a structural panel to withstand greater bending loads without a proportional increase in weight. To do this, the core material must remain bonded to both skins and be able to resist compression loads applied by the skins when the panel bends.

The previous section provided procedures for the repair of damaged skins. This section describes how to restore the core-to-skin bond and/or the structural properties of the core. Although the skin itself may not be damaged, it may be necessary to cut or remove a portion of the skin for access to the core. Repair or replacement of core material nearly always involves some degree of skin repair, requiring you to refer back to the procedures in the previous section.

5.0.1 Types of core related damage

Core related damage can vary from a small skin delamination with little or no actual damage to either the core material or skins, to moisture related core deterioration, to collision damage that can leave a hole through both the core and the inner and outer skins. The repair procedures in this section begin with the least damage, easiest to repair:

1. **Repairing skin delamination.** Often the core is wet, but still firm and usable. A delaminated area may be several square inches or several square feet.
2. **Replacing damaged cores.** The skin may be intact, but moisture penetration over time may have caused the balsa core to deteriorate. An impact may puncture the outer (or inner) skin and core without affecting the other skin. Even a minor puncture can allow moisture to migrate under the skin and affect strength of the core over a large area.
3. **Repairing transom delamination.** The plywood core may delaminate or rot as a result of moisture penetration through a crack or hole in the transom skin.
4. **Repairing holed panels.** An impact or modification can require rebuilding of the entire panel structure. Impact damage can extend to both skins and core or, one skin with major core damage.

   The work required to repair each type of damage varies with the size of the damaged area. Often, the full extent of damage cannot be determined until you have removed a portion of the outer skin as described in Section 4.1—*Assessing and preparing the damaged area*. After a thorough inspection and assessment of the damage, follow the procedure that is most appropriate to your situation and keep in mind that the objective is to restore the structural properties of the panel by rebuilding the load carrying ability of the core and the skins to the original or greater strength.

5.1 Repairing skin delamination

Skin delamination is often first noticed when you step on a flexible or spongy area on an otherwise firm deck. Most delamination is a result of moisture damage to the skin/core bond and usually involves balsa core or plywood cored panels. Moisture entering cracks or nearby loose hardware can migrate much more easily through these cores than a foam core. Also, balsa and

plywood cores are much less expensive and more widely used than foam cores in production boats. Often the core material will be wet or even saturated, but it may still be serviceable if dried thoroughly. However, if a wooden core remains wet long enough, it will begin to deteriorate and will need replacement.

Delamination can also occur in isolated pockets as a result of inadequate core bonding during manufacture. In some cases, the core may remain dry and undamaged, and simply need re-bonding.

5.1.1 Assessing delamination damage

The first step in the repair is to determine the extent of delamination and the condition of the core. Then follow the repair procedure most appropriate to your situation.

Locate and mark the extent of the damage by exerting pressure on the panel, checking for a soft feel and/or skin movement. Tap around the suspected area lightly with a small, hard object to help reveal the area of delamination. A void under the skin will sound flat or dull, compared to a more resonant sound of a solid laminate.

When you push against the surface, the delaminated skin will give easily until it hits the core. If the core is solid, the skin will appear fair when it's pressed tight against the core. If the core is damaged or deteriorated, you will be able to push the skin below the fair surface of the deck or hull. Water or air may squeeze from a nearby crack or hardware fastener.

Determine the condition of the core material by drilling 3⁄16"–7⁄32" (5mm)-diameter inspection holes through the skin several inches apart over the delamination. Push the skin tight against the core and drill through the core without drilling into the opposite skin. Collect the core material removed by the drill. Squeeze the core material tightly between your thumb and finger to determine whether the material is wet or dry and examine it for signs of decay. You may also insert a wire or nail through the hole to probe the core. If you hit voids or the core feels soft or punky, the core should be replaced.

5.1.2 Re-bonding delaminated skin to a dry core

If the core material is firm and dry, re-bond the skin by injecting epoxy between the skin and core as follows:

1. Cut 1⅛" (28mm) from the tip of a WEST SYSTEM 807 syringe. Cut the tip at an angle. Fill the syringe with an epoxy/406 filler mixture thickened to the consistency of catsup.
2. Inject the epoxy mixture under the skin through each of the inspection holes. The shortened tapered syringe tip will fit tightly in the 3⁄16"–7⁄32" inspection holes *(Figure 5-1)*. You should be able to develop enough pressure to force the epoxy several inches from the hole.
3. Clamp the skin to the core when you are sure you have injected enough epoxy to bridge any gaps between the skin and core. Use weights, braces or sheet metal screws through the inspection holes to hold the skin tight and fair against the core until the epoxy cures. Clean up excess epoxy before it begins to gel. Allow the epoxy to cure thoroughly before removing clamps.

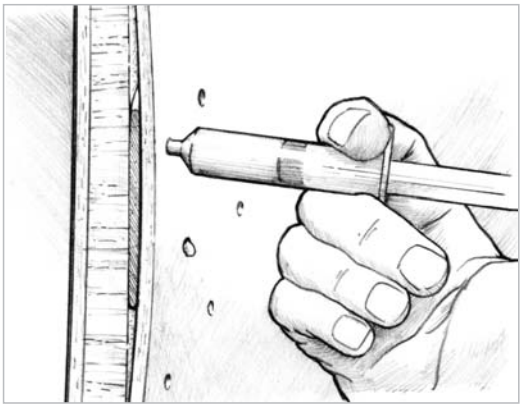

Figure 5-1 *Inject epoxy under the skin using an 807 syringe with the tip cut off to match the hole diameter.*

4. Fill any voids in the inspection holes with a thick epoxy/406 filler mixture after removing clamps. When the epoxy has cured thoroughly, fair and finish the surface as described in Section 2.

5.1.3 Re-bonding delaminated skin to a wet core

If the core material is wet but still solid, re-bond the skin after the core has been thoroughly dried. One of two methods may be used to expose the core for drying.

Pattern hole drying method

This method involves drilling a pattern of holes through the skin to expose the core to air and heat and allow moisture to escape. When the core is dry, epoxy is injected under the skin and the skin and core are clamped together until the epoxy cures. This method is useful if the delamination is small and is not under an area of non-skid deck.

1. Drill 3⁄16"–7⁄32" (5mm)-diameter holes at 1" (2.5cm) intervals, creating a pegboard-like pattern that extends several inches beyond the delaminated area *(Figure 5-2)*. The holes should penetrate the fiberglass skin and the core without drilling into the opposite skin. Use a drill depth control device to prevent drilling entirely through the panel.

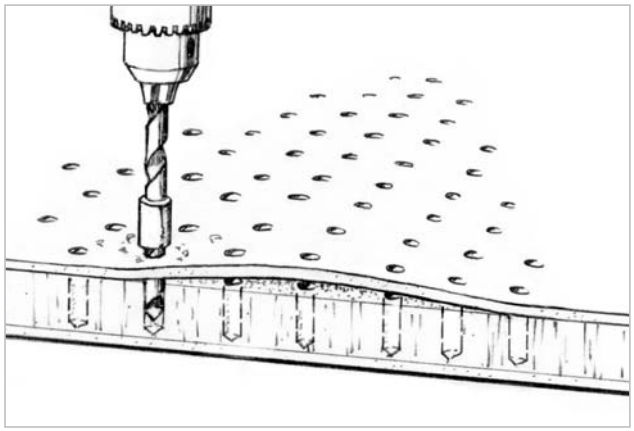

Figure 5-2 *Drill a pattern of holes, 1" apart over the area of delamination, to allow the core material to dry out.*

2. Dry the core thoroughly. If the core is extremely wet, start by using a high-powered shop vacuum cleaner or vacuum bagging to draw water out of the laminate. A heat lamp or radiant heater with some air movement over the area will speed the drying. CAUTION: to be sure the fiberglass surface or the core is not damaged by excessive heat, do not heat the surface above 130°F (54°C). Proper drying may take days rather than hours. Allow the surface and core to cool to room temperature before continuing. Occasionally drill a few test holes between the existing holes to check for core dryness.
3. Cut 1⅛" (28mm) from the tip of a 807 Syringe. Cut the tip at an angle. Fill the syringe with an epoxy/404 or 406 filler mixture thickened to the consistency of catsup.
4. Inject the epoxy mixture under the skin through each of the holes starting in the center of the delaminated area *(Figure 5-3)*. The shortened tapered syringe tip will fit tightly in the 3⁄16"–7⁄32" (5mm) holes. You should be able to develop enough pressure to force the epoxy to the surrounding holes.
5. Clamp the skin to the core when you are sure you have injected enough epoxy to bridge any gaps between the skin and core. Use evenly placed weights or braces covered with plastic to hold the skin tight and fair against the core. Sheet metal or drywall screws will also work. Whichever clamping method you use, don't distort the panel by applying too much pressure. You only need to keep the skin fair and keep the skin and core in contact while the epoxy cures. Remove the excess epoxy before it begins to gel. Allow the epoxy to cure thoroughly before removing clamping.

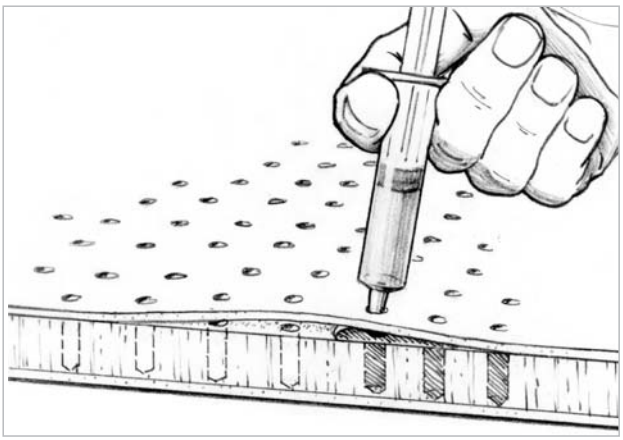

Figure 5-3 *Inject the epoxy mixture under the skin through each of the holes starting in the center of the delaminated area. Fill all voids between the skin and core.*

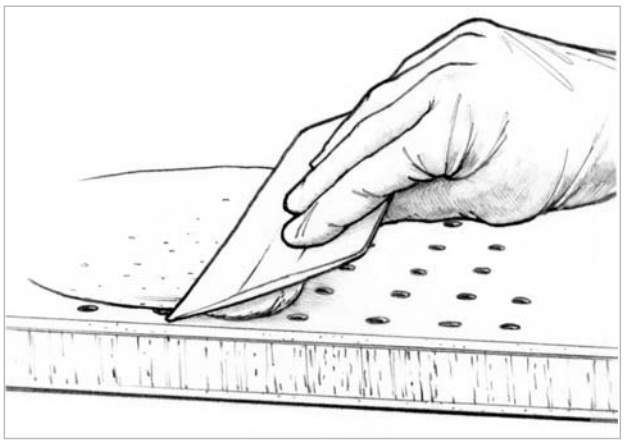

Figure 5-4 *Fill any remaining voids and fair the surface with an epoxy/407 mixture.*

6. Sand the surface and fill any remaining holes with an epoxy/407 low-density filler mixture, thickened to the consistency of peanut butter *(Figure 5-4)*. After the epoxy has cured thoroughly, sand the surface fair and finish it as described in Section 2.
   For thin skins, this procedure may result in a weakened structure, making it necessary to bond several layers of 6 oz (203g/sq m) fiberglass fabric over the repair area. Refer to Section 9.4.6—*Applying fiberglass cloth and tape*.

Skin removal method

This method involves removal of a section of skin to expose the core for drying. Because of the difficulty (or impossibility) of fairing and finishing a non-skid surface, it's often easier to cut and remove an entire non-skid area. After the core is dried, the skin is re-bonded and then patched and refinished at the smooth areas outside of the nonskid. Follow the procedure in Section 5.2—*Replacing damaged cores*.

5.2 Replacing damaged cores

This method is used when the core is damaged and must be replaced or when a skin delamination is in a non-skid area of a deck. After the core is replaced or dried, the skin is re-bonded to the core and a repair patch is laminated over the joint to restore skin continuity.

Remove the skin and replace the damaged core as follows:

1. Cut through the skin around the area of delamination with a panel or circular saw with a carbide tipped plywood blade or a router with a small diameter straight-fluted bit. Set the blade or bit to the depth of the skin only. On smooth surfaces cut several inches outside the area of delamination. If the delamination is in an area of non-skid, cut in the smooth area several inches outside of the non-skid area or midway between non-skid areas.
2. Remove the skin *(Figure 5-5)*. The skin should separate easily in areas where the core is damaged or wet. In areas where the skin is well bonded to the core, use a chisel or thin blade between the skin and core to pry the skin away from the core material. Be careful not to bend the skin too much or gouge the core. Applying heat to the joint with a heat gun will also help to soften the skin core bond. Be careful not to overheat the skin.
3. Dry the core thoroughly. If the core is extremely wet, start by using a high-powered shop vacuum cleaner or vacuum bagging to draw water out of the laminate. A heat lamp or heat gun will speed the drying. If the core is undamaged, skip the core replacement and re-bond the skin as described in Section 5.2.1.

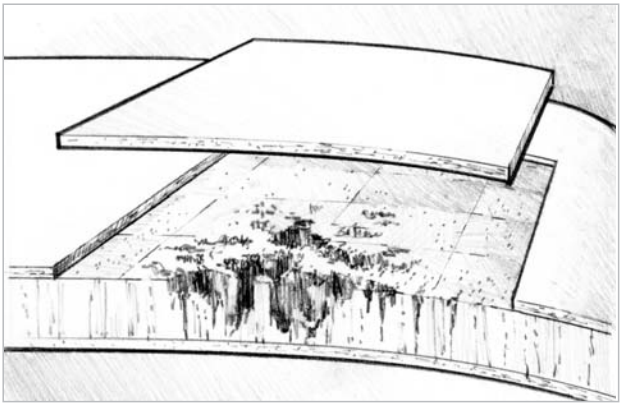

Figure 5-5 *Cut through the skin only, outside of the area of delamination. Pry the skin carefully away from the core material.*

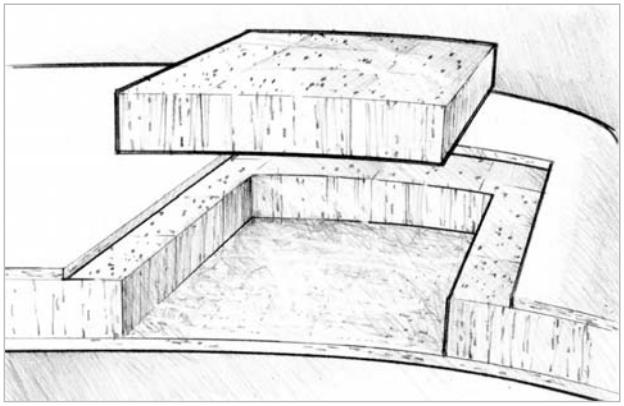

Figure 5-6 *Fit a new piece of core material to match the shape, thickness and density of the damaged core material that was removed.*

4. Remove damaged core material. Cut around the area of damage with a utility knife. Use a chisel to remove the damaged core and shave all traces of core from the opposite skin.
5. Prepare a new piece of core material to match the shape, thickness and density of the core that was removed. Dry fit the piece to be sure the new piece is no higher than the surrounding core *(Figure 5-6)*. When replacing damaged core material, try to purchase the same material used by the builder. If that is impossible, locate a material as close as possible to the core's original thickness and density. It is better to have a slightly thinner core material than a thicker one.
   If the damaged area is smaller than about 2" × 2" (5cm × 5cm), the area may be filled with a thick epoxy/404 or 406 filler mixture.
   If the damaged area is smaller than about 12" × 12" (30cm × 30cm) and the original core material is not available, you may substitute core material cut from soft woods like pine, fir or cedar. Cut short blocks to the length of the appropriate core thickness. For example, standard fir 2 × 4's, cut to ½" (12.7mm) lengths, will yield 1½" × 3½" (3.8cm × 8.9cm) end-grained blocks that may be trimmed to fit like tiles in place of damaged ½" core.
6. Bond the new core material in place. Wet out the bonding surfaces of the skin, existing core and new core with epoxy.
   Coat the bonding surfaces with an epoxy/406 filler mixture thickened to the consistency of mayonnaise. Apply enough thickened epoxy to bridge all gaps between the skin and core and between pieces of core. Press the core material firmly in position. A small amount of thickened epoxy should squeeze from the joint around the piece.
7. Clamp the piece (or pieces) with plastic covered weights or braces, if necessary, to hold it in place. Smooth the epoxy at the joint and remove excess epoxy before it begins to gel. Allow the epoxy to cure thoroughly before removing clamps.

5.2.1 Re-bonding the skin

If the skin was damaged from an impact or abrasion or damaged during removal, laminate a new skin in place against the new core as described in Section 4.3. If the skin is reusable, re-bond the skin as follows:

1. Sand the surface of the core and the inner surface of the skin that was removed. Dry fit the skin for fit and to be sure that it lays flat and fair with the adjoining skin.
2. Bond the skin to the core in its original position. Wet out the bonding surfaces of the core and skin with epoxy. Coat the bonding surface of the core with an epoxy/406 filler mixture thickened to the consistency of mayonnaise. Apply enough of the thickened mixture to bridge all gaps between the skin and core. Position the skin so that the gap around the piece (the saw cut) is equal on all sides.

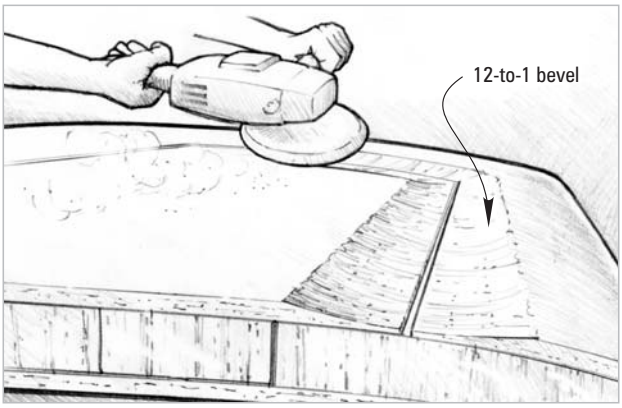

Figure 5-7 *Grind a 12-to-1 bevel on the edges of the joint, so the joint repair patch can be faired flush with the surface.*

3. Clamp the skin in position with vacuum bagging, weights, braces or sheet metal screws. Vacuum bagging is an ideal method for providing equal clamping pressure over large areas. Follow the procedure for vacuum bagging repair patches described in Section 4.3.3. If you are using standard clamping, a small amount of epoxy should squeeze from the joint. Remove excess epoxy before it begins to gel. Allow the epoxy to cure thoroughly before removing vacuum pressure or clamps.
4. Grind a 12-to-1 bevel on both edges of the joint and laminate a repair patch over the joint to restore skin continuity *(Figure 5-7)*. The bevel will provide a recessed bonding area for the application of fiberglass fabric and allow the patch to be faired flush with the surface. The objective and procedure for patching the joint are the same as repairing damaged skins. Follow the procedure described in Section 4.3.

Replace damaged core from below

A variation of this technique is to replace damaged core by removing the lower or inside skin and leaving the outer skin intact. Although working overhead makes this variation more difficult, the difficulty is offset by the elimination the cosmetic work (Step 4, above) that would be required on the outside of the deck. This variation is especially useful when the repair is in a non-skid area of the deck.

The underside of a deck is often covered by a fabric liner, which can be peeled back to expose the repair area and then put back in place, hiding the repair. After removing the skin and the damaged core, replace the core as described above. Except, cut the core into convenient sizes for working overhead and use epoxy thickened enough to hold the pieces in place overhead. Immediately bond the inner skin to the core and, as necessary, use sticks to prop the entire repair in place, flush with the surrounding skin, until cured. When the repair has cured, it is not necessary to grind a bevel to make the repair flush with the surface. With the proper fabric overlap on each side of the joint (12 times the thickness of the laminate), a structural repair can be achieved without grinding a bevel. Prepare both sides of the joint to achieve a good bond and apply the layers of fabric over the joint as you would if you were applying to the bevel. When the epoxy has cured, put the liner back in place and the repair is complete.

5.3 Repairing transom delamination

Removing a section of skin to expose and replace the core is a method often used to repair delaminated powerboat transoms. Transoms are major structural parts of fiberglass powerboats, especially outboards. They not only support the weight of the motor, they maintain the shape of the boat and are a mounting point for holdowns, towing eyes and other accessories.

Outboard motors apply a considerable load to the transom. The effects of the motor's weight are concentrated on small areas of the skin and core when the boat is accelerated under normal operating conditions, and when the boat is bouncing along on a trailer (*Figure 5-8)*. Over time

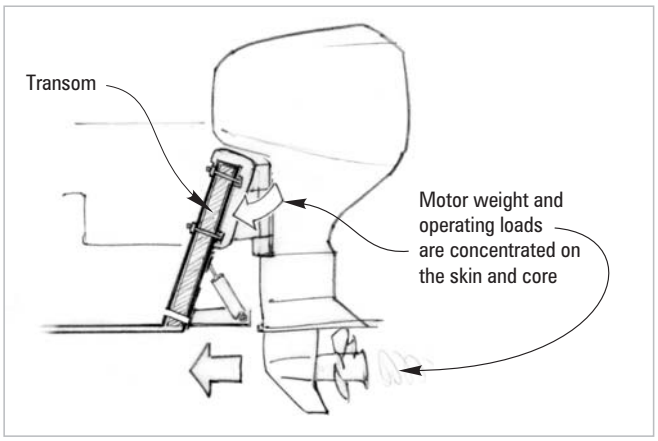

Figure 5-8 *Motor loads are concentrated on the fiberglass skin and core where the mount is located. Moisture penetrates cracks in the skin, leading to delamination and eventual rot of the plywood core.*

the core is crushed and cracks develop in the skin. Moisture penetrates the plywood core, leading to delamination and eventual rot. Moisture can also penetrate the transom skin at hardware fasteners and around drain holes and I/O cutouts. All of these factors have a cumulative effect on structural failure.

Excessive motor movement may be your first sign of trouble. Tap around the suspected area lightly with a small, hard object to help reveal any areas of delamination. A void under the skin will sound flat or dull, compared to a more resonant sound of a solid laminate. Damage can be confirmed by drilling 3⁄16"–7⁄32" (5mm)-diameter inspection holes into the core at the suspected delamination. Examine the core material removed by the drill for signs of water or decay.

5.3.1 Planning the repair

The objective is to remove and replace the damaged core. Access to the damaged core is gained by removing the fiberglass skin from either the outside or, if possible, the inside of the transom. The boat's design determines which method is more practical. Interior access requires much less cosmetic finishing, but stringers, soles or decks often make interior skin removal impossible. The following method describes accessing and removing the core from the outside. If the removed fiberglass skin is in good condition, it is usually glued back in place over the new core, then structurally and cosmetically blended into the surrounding skin as described in Section 5.2.1. Support the hull to prevent sagging or distortion before removing the skin and core.

This repair is much easier if the total area affected can be confined to the transom and not extend around the corners. It is much easier to end a paint job at the corner of an object, where there is a visual break, than it is to match color and texture in the middle of an area. The following transom repair method leaves enough fiberglass around the perimeter of the transom for a proper bevel and repair patch, yet allows enough access for the damaged core to be removed and replaced. Before making a substantial cut through a structural fiberglass skin, support the hull with blocking to maintain the hull's shape.

Determine the location of the cut

After removing the motor, hardware and trim, measure the fiberglass skin thickness at one of the holes in the transom. The fiberglass thickness determines the bevel length and the distance of the cut line in from the corners. The bevel length is at least 12 times the fiberglass thickness.

A 12-to-1 bevel allows room for multiple layers of fiberglass fabric and epoxy across the cut line to restore strength to the fiberglass skin. If the fiberglass skin is ⅛" thick, the width of the bevel will be at least 1½". If the fiberglass is ¼" thick, the cut line will need to be at least 3" in from the corners to allow for a 3" bevel. If the original fiberglass skin is reused, the same bevel is required on each side of the cut after the skin is re-bonded to the new core.

Layout the cut line on the transom the required distance from the corners. Measure from the end of the rounded corners where they blend into the flat transom surface.

5.3.2 Removing the damaged skin and core

The skin removal method as described above for deck or hull panel delamination is essentially the same for transom delamination. Often, if the core has been wet for a period of time, the plywood veneers will begin to delaminate and much of the veneer may have rotted away. Remove the outer (or inner) transom skin and plywood core as follows:

1. Cut through the skin at the cut line established by the bevel length. Use a panel or circular saw with a carbide tipped plywood blade or a router with a small diameter straight-fluted bit. Set the blade or bit to the depth of the skin only.
2. Remove the skin. The skin should separate easily in areas where the core is damaged or wet. In areas where the skin is well bonded to the core, use a chisel or thin blade between the skin and core to pry the skin away from the core material. Applying heat to the joint with a heat gun can help to soften the skin core bond. Be careful not to overheat the skin. Avoid damaging the skin by over bending or using too much force when prying the skin from the core. It is worth the effort of getting it off in one piece.
3. Inspect the condition of the plywood core material. If the plywood is sound but wet, you may be able to dry it thoroughly and re-bond the skin (Section 5.3.1). Fill any minor voids or delaminations or end grain in the dried core while it is uncovered. Drying a saturated transom core may be difficult, even with heaters or heat guns. Unless you have plenty of time to allow for drying, you are better off replacing all the core.
   If, however, the plywood has deteriorated or dry rot has set in, the plywood should be replaced. Even if the core damage is isolated to some portion of the transom, you may want to consider replacing all of the plywood core rather than repairing it.

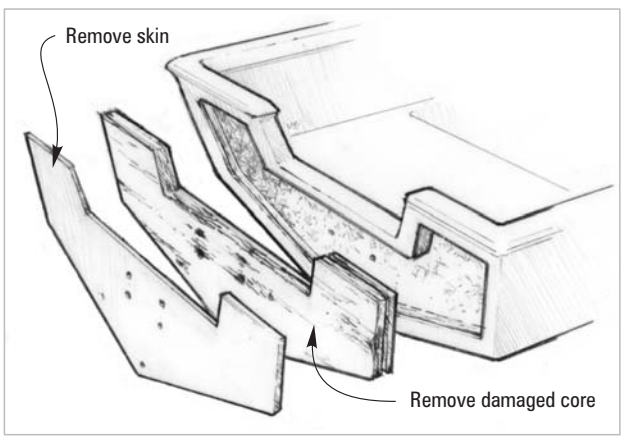

Figure 5-9 *Cut through the outer skin at the perimeter of the core. Remove the skin and the core if it is delaminated or rotted.*

4. Remove the damaged plywood core *(Figure 5-9)*. Use a chisel or whatever combination of tools you need to remove all damaged material. The plywood core in the perimeter and corners of the transom will be the biggest challenge. If necessary, use large drill bits to carefully weaken and remove stubborn areas. Rotary rasps can also be effective. Home made tools similar to a grub hoe or an adz can be used to remove the stubborn perimeter areas. Shave all traces of the core material from the inner skin, being careful not to damage the skin. Make any necessary repairs to the inner skin. Sand the skin to prepare for bonding.

5.3.3 Preparing a new transom core

Prepare a new plywood core to match the shape and thickness of the core that was removed. Try to use the same grade plywood (or better) that was used in the original core. Marine grade plywood is ideal for this repair. If marine grade plywood is not available, use more layers of thinner AB grade exterior plywood. Be sure to fill any voids in the plywood edges with thickened epoxy after the panels are cut into shape.

When layers are installed in pieces, as shown below, use thinner sheets of the same type of plywood, laminated to equal the thickness of the original core. For example, if a 1½"-thick core consisted of two sheets of ¾" plywood, you may laminate three sheets of ½" or four sheets of ⅜" to equal the original 1½" core thickness. Trim and dry fit the new pieces of core to fit the void left by the old core.

Make a template of the transom and use it to layout the plywood layers. Because the opening in the transom skin is smaller than the full sized plywood core, you will need to replace each layer of the core in pieces *(Figure 5-10)*. Cut each layer into pieces small enough to fit through the opening in the transom skin. Stagger the joints in each layer, by at least eight times the plywood thickness, from joints in the adjoining layers. For example, a 3" stagger will be required between joints when using ⅜" plywood. Ideally these joints are staggered widely. They can also be made on a diagonal to stagger them even more.

Joints near the sides of the transom will affect strength less than joints near the middle. Remember, the cantilevered load of an outboard motor puts significant loads on the middle of the transom. If joints in the layers are scarfed with an 8:1 bevel rather than butted, joint location is not an issue.

Before mixing epoxy:

- Plan all of the installation steps. The layers can be glued in place in one continuous operation or over several sessions.
- Label the pieces and dry fit them in the transom to eliminate potential problems during actual assembly. The fit need not be perfect—thickened epoxy will bridge gaps.
- Use 206 Slow Hardener for extra working time. Use 209 Extra Slow Hardener if you will be working in warm temperatures.
- Be sure you and any parts of the boat you do not want to get epoxy on are protected.
- Be sure all parts, tools and clamps are within easy reach. Drywall screws are a practical clamping method for a plywood transom lay-up. Clamps, wedges or prop sticks can also be used. Bolts with nuts and oversized washers can be used in places where holes will eventually be required—motor mount holes and drain holes.

5.3.4 Installing the new core

If you will be working alone and wish to accomplish the repair in manageable steps, laminate the new pieces of plywood core in place as follows:

1. Prepare all bonding surfaces. Check the condition of the inner skin and make repairs as necessary. Sand rough surfaces. Remove all loose material and dust.
2. Wet out the bonding surfaces of the inner fiberglass skin and first piece of core with epoxy. Apply extra epoxy to the plywood end grain.
3. Coat the bonding surfaces of the inner skin and hull edges with an epoxy/403 or 406 filler mixture thickened to the consistency of mayonnaise. Use a notched spreader to apply enough thickened epoxy to bridge all gaps between the core piece and the skin and the edge of the core and the hull. Avoid over-thickening. The epoxy needs to move under minimum pressure. Adjust viscosity by adding more or less filler to achieve consistency between that of catsup and mayonnaise.
4. Place the first piece of plywood in position against the coated skin *(Figure 5-10)*. Clamp the piece in place with drywall screws (and oversized washers) through the inner skin to draw the pieces of core tight to the inner skin. Coat the screws with a mold release for easy removal. A small amount of epoxy should squeeze from the joint around the core. (Fill the screw holes with epoxy after the lay-up has cured.)
5. Repeat the process for the remaining pieces of the first layer. Fill any gaps and smooth the epoxy at the joints. Remove excess epoxy before it begins to gel. Allow the epoxy to cure thoroughly before removing screws, clamps or vacuum pressure. Once cured, you have a rigid base against which you can glue or laminate the remaining plywood one layer at a time.

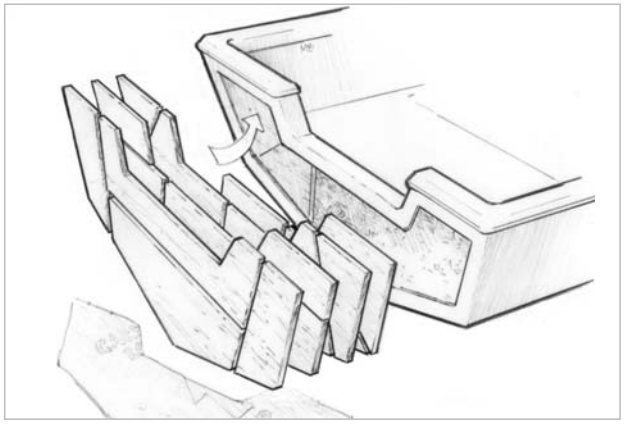

Figure 5-11 *Bond a new plywood core in place. Laminate sheets of thinner plywood to equal the thickness of the old core. Trim the pieces to fit the void left by the old core—use a cardboard template to layout pieces. Cut the pieces as necessary to fit opening.*

6. Recheck the fit of the final pieces and be sure to sand cured epoxy coated surfaces prior to laminating additional plywood layers.
7. Repeat the process for each layer. Use drywall screws to draw the new layer down to the first layer. Remove the screws and fill the holes with epoxy after the epoxy cures, or if you plan to leave the fasteners in place, be sure they are stainless, galvanized or bronze.
   An alternative method is to install and clamp all the layers in place at the same time if a very slow curing hardener (209 Extra Slow) is used. Dry fit and label all of the parts. Apply unthickened epoxy to all of the plywood segments, especially the end grain around the perimeter of each piece, before applying thickened epoxy. Pieces can be temporarily clamped with drywall screws. Remove and replace the screws as each layer is installed.

5.3.5 Replace the fiberglass skin

After the core replacement is complete, the original fiberglass skin can be laminated over the new core or if necessary a new skin can be laminated over the core.

A transom skin is often reusable except for a relatively small damaged area around the motor mount. If the damage is limited, it may be easier to repair the damage in the center of the skin, after re-bonding the skin, rather than laminating a new skin over the entire transom. Repair the skin using the appropriate procedure in Section 4 after the skin is replaced. re-bond the original skin as follows:

1. Sand the bonding surfaces of the core and the skin. If the skin was repaired, be sure the back side of the repair is sanded flush. Dry fit the skin to be sure it lays flat and fair with the adjoining skin.
2. Wet out the bonding surfaces of the core and skin with epoxy. Bond the skin to the core in its original position using the same laminating techniques used to bond the plywood core in place.
3. Clamp the skin with drywall screws driven through plywood blocks or oversized washers. Large blocks or washers spread the holding power of the screws over a larger area and prevent

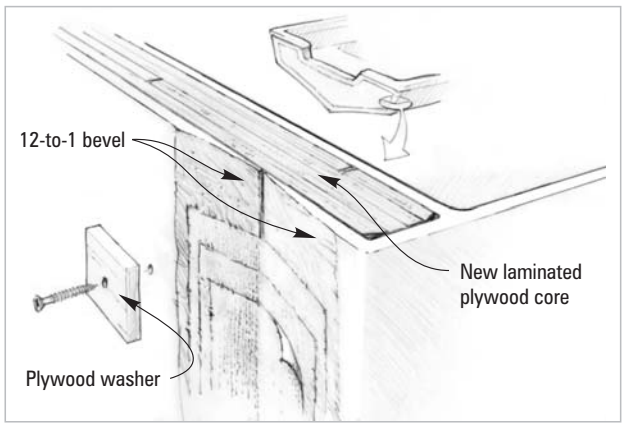

Figure 5-10 *Grind a minimum 12-to-1 bevel on both sides of the joint. Laminate a repair patch over the joint to restore skin continuity.*

dimples in the fiberglass skin that would require filling and fairing later. Use pieces of plastic sheet under the washers or blocks to prevent bonding to the skin. Allow the epoxy to cure. Remove the screws and fill the holes with epoxy.

4. Grind a minimum 12-to-1 bevel on both sides of the joint. The outside edge of the bevel should be short of the corner, as described earlier in Section 5.3.1—*Planning the repair*. Laminate a repair patch over the joint to restore skin continuity *(Figure 5-11)*. The bevel will provide a recessed bonding area for the application of fiberglass fabric and allow the patch to be faired flush with the surface. The procedure for patching the joint are the same as repairing damaged skins. Follow the procedure described in Section 4.3. Limit the patch and finishing to the transom side of the corners.

5.3.6 Laminating a new transom skin

If your fiberglass skin is unusable, plan to laminate a new fiberglass skin over the core with multiple layers of fiberglass and epoxy. Apply enough layers to equal the same thickness as the original skin. See the fabric thickness chart in Appendix A. Layers can be applied immediately or while the previous layer is still tacky. If the epoxy is allowed to cure beyond being tacky, allow it to cure overnight, then wash the surface with water and sand the surface to prepare it for more layers. Laminate the new skin so it extends to the edge of the 12-to-1 bevel that was machined earlier on the outer edges of the transom. Install the biggest patch first with each layer being progressively smaller to fill the 12-to-1 bevel. For additional information on laminating a large new fiberglass skin see Section 4.3.

1. Grind a 12-to-1 bevel around the remaining edge of the transom. The outside edge of the bevel should be short of the corner, as described earlier in Section 5.3.1—*Planning the repair*.
2. Cut the appropriate number of fabric pieces to the size and shape of the transom. Cut the first piece ½" from the outer edges of the bevel. Cut each of the remaining pieces smaller on each side than the piece below it. The final piece should be the same size as the inner edge of the bevel. The edges of the middle pieces should be evenly spaced between the edges of the first and last pieces. The spacing depends on the number of pieces (equaling the laminate thickness) and the length of the bevel.
3. Wet out the transom core and bevel with epoxy. Using a plastic spreader, coat the transom core with a thin even layer of an epoxy/406 filler mixture thickened to a mayonnaise consistency.
4. Wet out the cloth with epoxy on a work surface covered with plastic sheeting. Apply enough epoxy to saturate the cloth using a thin foam roller or by pouring epoxy onto the fabric and spreading with a plastic spreader.
5. Place the fabric on the transom, centering it within the edges of the bevel. Smooth the fabric into the thickened epoxy layer with a plastic spreader. Use the spreader to remove trapped air and excess epoxy and to smooth the fabric against the surface.

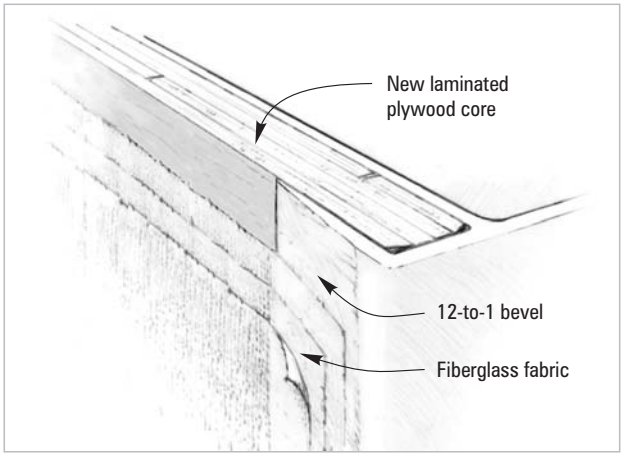

Figure 5-12 *Wet out and apply each layer of fabric with epoxy, ending with the smallest piece. Smooth each layer with a plastic spreader to remove wrinkles, trapped air and excess epoxy.*

6. Wet out and apply each of the remaining fabric layers with epoxy, ending with the smallest piece. Apply each layer before the previous layer becomes tack free. Smooth each layer with a plastic spreader to remove wrinkles, trapped air and excess epoxy *(Figure 5-12)*.
7. Apply several coats of epoxy over the fabric to fill the weave of the fabric when the epoxy has reached a gel stage. Use the thin foam roller to apply each coat after the previous coat reaches its gel stage and before it becomes completely tack free (to avoid sanding between coats). Allow the final coat to cure thoroughly.
8. Wash and sand the final coat after it has cured thoroughly. Sand and fair in the edges of the fabric to blend with the hull surface. Any flaws or unevenness can be faired with a thick mixture of epoxy and 407 or 410 Fairing Filler. Seal filled and sanded surfaces with epoxy and wet sand to prepare the surface for paint.
   Be sure to coat and seal the end grain of all holes drilled through the transom with multiple coats of epoxy. This is not a waste of time. If the holes are not properly sealed, plan on replacing the core again in the future. If all sources of water are eliminated by sealing the wood in epoxy, the repair should be better than new and last indefinitely. Remember to coat screw holes with epoxy just prior to installing screws for motor mounts and transom hardware. Apply mold release (or vegetable oil cooking spray) to the fasteners prior to gluing them in place if you plan to remove them at some point in the future.

Replacing the core and both skins

If you can't separate the skins from the core or if the skins and core are damaged beyond repair, cut the entire transom section out, and bond in a new core as follows:

1. Cut away the transom by sawing through the skins and core at the perimeter of the transom. Prepare the bonding area by sanding away any rough or uneven edges around the hole perimeter. Be sure the hull is supported to prevent distortion.
2. Prepare the transom core replacement as described above (5.3.3). Bond the plywood pieces together on a flat surface or a surface matching the curve of the transom. Trim the perimeter of the new core, checking the piece for fit in the exact position of the old core. Be sure the hull is set up square and true before bonding the new transom in place.
3. Bond the new core in position. Wet out the bonding surfaces of the new plywood core and the hull with epoxy. Use particular care to thoroughly wet out the end grain of the plywood.
   Coat the bonding surfaces of the core and hull with an epoxy/404 filler mixture thickened to the consistency of mayonnaise. Use enough of the mixture to ensure no voids remain between the two surfaces when the core is positioned.
4. Clamp or brace the core in position until the epoxy cures. Use only enough clamping pressure to restrict movement and squeeze out some of the mixture. Remove the excess thickened epoxy or use it to fill any voids in the joint before it begins to gel. Align the core in the exact position of the old core and allow the epoxy to cure thoroughly before removing clamps.
5. re-bond reusable skins as described below (Section 5.3.5) or laminate new skins following the procedures in Section 5.3.6.

5.4 Repairing holed panels

Minor impacts or abrasions can include dropping a cooler or sharp tool on the deck, rubbing against a dock or the weight of an outboard motor mount against a transom. This type of damage often results in a hole or crack through one skin and possible skin delamination around the impact. If the damaged area has been submerged or left unprotected for a period of time, water penetration can lead to further delamination and eventually rot. Most minor impact damage can be repaired with procedures previously described.

Major impact damage is often associated with collisions, groundings, natural disasters and occasionally traffic accidents. The amount of damage depends on the force of the impact and the

shape of the object being hit. In this case, we are referring to structural damage through the core and ***both*** skins. Damage may mean a fracture that results in loss of skin continuity or a hole several feet across. There is also a strong possibility the impact that damaged the panel may have caused internal structural damage to bulkheads, frames, etc. Any such damage should be repaired prior to undertaking the repair of the cored panel.

The objective in repairing holes through cored panels is to replace damaged core material and restore skin continuity to both skins. The sequence of skin and core replacement will vary depending on access to the back of the panel.

5.4.1 Repairing holes through cored panels with back access

After preparing the hole, replace the core material and laminate the inner and outer skin to the core as follows:

1. Prepare the hole by cutting away ragged or damaged skin. Cut back to undamaged core and skin while maintaining a circular or oval hole shape. Grind a minimum 12-to-1 bevel on the edges of the inner and outer skins at the hole to provide adequate bonding surface when re-laminating the skin repair patches. For example, if the skin is ¼" (6mm)-thick, the bevel will extend 3" (7.5cm) from the edge of the hole *(Figure 5-13)*.

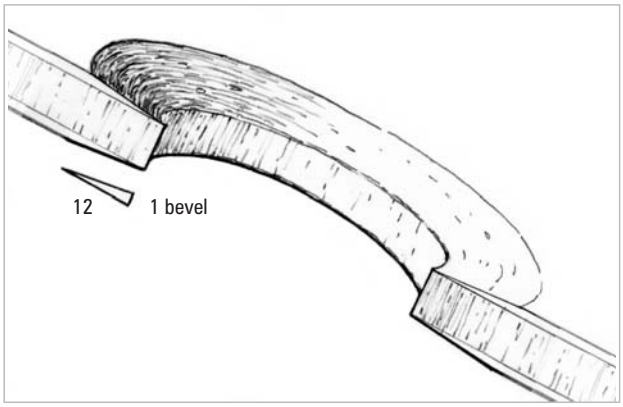

Figure 5-13 *Grind a 12-to-1 bevel on the edges of the inner and outer skins.*

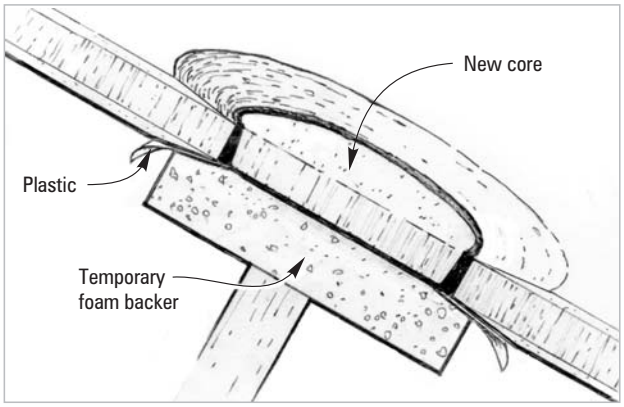

Figure 5-14 *Brace a temporary backing against the back of the hole to support the new core.*

5

2. Provide a temporary backing to support the core while bonding it in position and while laminating the new outer skin patch. Cut a piece of low-density insulating foam slightly larger than the hole opening. Bevel the edges of the foam so the face of the foam is flush with the inner skin/core bond line. Cover the foam with 4-6 mil plastic and brace it in position against the inner edge of the hole. If the foam is too stiff to conform to a curved panel shape when braced from the back, sand the foam to a shape that matches the panel curve *(Figure 5-14)*.
3. Prepare a new piece of core material to match the shape, thickness and density of the core that was removed. Dry fit the core to match the shape and contour of the core that was removed. When replacing damaged core material, try to purchase the same material used by the builder. If this is impossible, locate a material that is as close as possible to the core's original thickness and density.
4. Bond the core material into position. Wet out the edges of the hole and the core material with epoxy. Apply a layer of epoxy/406 filler thickened to the consistency of peanut butter to the inside edges of the hole and the core material. Place the core material in position. If the epoxy mixture will not hold the core in place or if it will not conform to the panel contour, use braces to hold it in position. Smooth any excess epoxy at the joint and fill any voids in the joint before the epoxy begins to gel. Allow the epoxy to cure thoroughly.
5. Laminate a new outer skin repair patch following the procedure in Section 4.3. Finish the repair following the procedure in Section 2.

6. Laminate a new inner skin repair patch following the procedure in Section 4.3, after removing the temporary backing support. Finish the repair as desired.

5.4.2 Repairing holes through cored panels without back access

The difference between repairing holes with or without back access is in the sequence of steps. Without back access it's necessary to laminate the inner skin first, replace the core, and then laminate the outer skin. Laminating the inner skin from the outside requires additional preparation, as follows:

1. Prepare the hole by cutting away ragged or damaged skin. Cut back to undamaged core and skin, while maintaining a circular or oval hole shape.
2. Cut back the outer skin and core several inches from the edge of the hole through the inner skin to provide an area wide enough to grind a 12-to-1 bevel around the edge of the inner skin *(Figure 5-15)*. Use a router with a straight fluted bit set to the depth of the outer skin and core only, to avoid cutting the inner skin. Cut the core and outer skin back 12 times the thickness of the inner skin plus about 1" (25mm) to leave enough room to grind the inner skin bevel. For example, if the inner skin is ¼" (6mm)-thick, the bevel will extend 3" (7.5cm) from the edge of the hole.

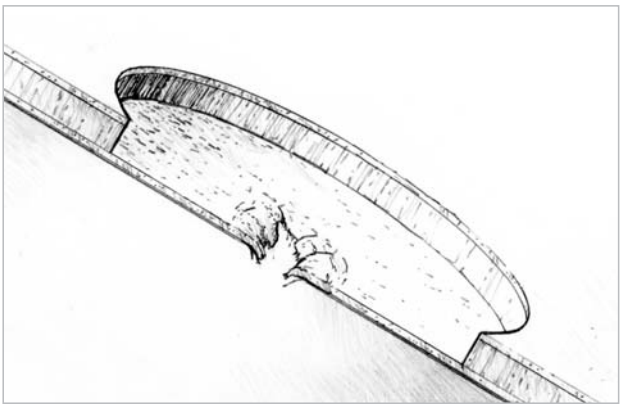

Figure 5-15 *Cut back the outer skin and core several inches from the hole through the inner skin.*

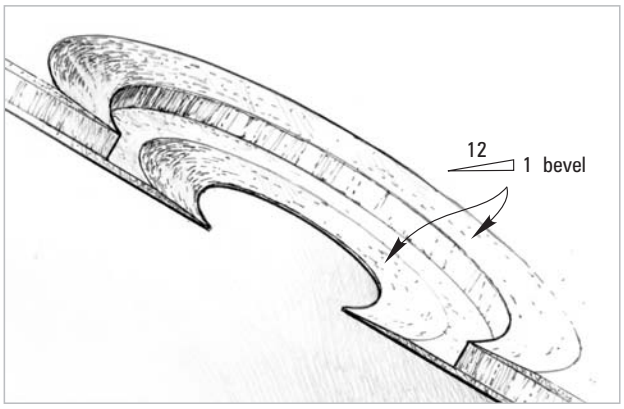

Figure 5-16 *Grind a 12-to-1 bevel around the edge of the inner and outer skins.*

The core and outer skin should be cut back about 4" (10cm) from the edge of the hole through the inner skin.

3. Grind a minimum 12-to-1 bevel around the inner edges of both skins to provide adequate bonding surface when re-laminating the skin repair patches *(Figure 5-16)*.
4. Bond a permanent backer to the back side of the inner skin following the procedure in Section 4.2.2. The backer should match the contour of the panel.
5. Laminate a new inner skin repair patch following the procedure in Section 4.3.
6. Bond a new piece of core material in place against the new inner skin.
7. Laminate a new outer skin repair patch following the procedure in Section 4.3. Finish the outer skin following the procedures beginning in Section 2.1

The information in Sections 2, 3, 4 and 5 is intended to provide a range of repair procedures for typical cored and non-cored fiberglass structures. Individual procedures or the sequence of procedures may be altered to suit your situation. Keep in mind that the objectives in repairing the fiberglass structure are to restore skin continuity and structural properties of the core to equal or greater strength than the original. ■

6 Repairing and Upgrading Soles and Decks

A common source of problems on open runabouts and pontoon boats is the cockpit sole or deck. Poorly installed soles and decks are prone to delamination and rot. The first part of this section describes how to remove and replace damaged plywood decks. The second part describes how to install a teak veneer deck that is a practical and beautiful option for finishing a deck repair.

6.1 Repairing delaminated soles and decks

On runabouts, the plywood cockpit sole is usually just a layer of plywood screwed down to the top of stringers and frames and "tabbed" or joined to the hull sides with fiberglass tape at the edges of the plywood and up the side of the hull a few inches. Some runabouts will also have a layer or two of fiberglass fabric over the top of the plywood with a non-skid pattern molded in. Many have a layer of carpet or vinyl flooring material glued onto the plywood that can trap moisture and contribute to delamination and rot.

Moisture enters the plywood end grain alongside of the screws holding the sole down to the framing as well as the fasteners holding the seats, coolers, and other items to the sole. (Moisture also penetrates and damages the stringers supporting the sole, See Section 3—*Repairing Stringers and Floors.*) In addition, there is seldom any fiberglass or resin coating to seal the back side of the plywood, so moisture also enters the plywood from below the sole where the air is often damp and stagnant.

When the plywood begins to delaminate, the deck will feel spongy underfoot. This is discomforting and unsafe to walk on, and also reduces the athwartship (side to side) hull stiffness the sole would normally provide. If not repaired, the plywood will rot. This situation can be avoided if the builder takes care to seal any penetrations into the plywood.

If moisture damage is severe enough, replacing the affected plywood is often necessary. The following procedure describes sole replacement in a runabout. A pontoon deck would be repaired in much the same way, but it will usually be fastened with screws around perimeter framing.

6.1.1 Removing the damaged sole

1. Remove any equipment or hardware screwed down to the sole. This may include things like seat bases, cooler brackets, and step or ladder brackets.
2. Pull up any carpeting or covering to expose the fasteners or tabs used to hold the plywood down on top of the frame and stringer system. If there are cutouts in the sole for access to storage compartments below, carefully remove any trim around the cutout. You will probably want to reuse that once the new sole is in place.
   Before cutting tabs or removing any of the fasteners, make sure the hull is supported so that its sides do not move once the sole is no longer supporting them. In many boats, this will not be a problem, but there are some hulls that will be very floppy when the sole is out. If the new sole is installed while the hull is out of shape, the hull will stay that way.

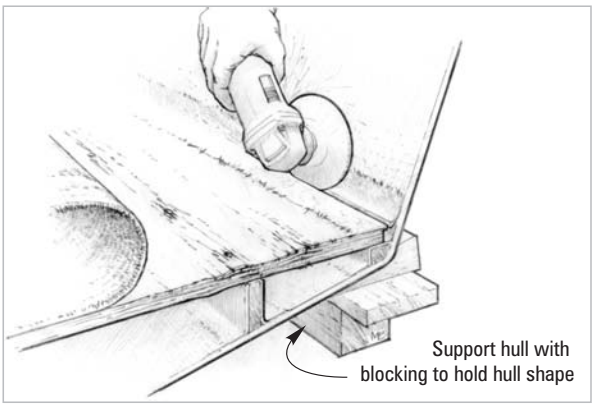

Figure 6-1 *Cut through the fiberglass at the sole/hull joint if the plywood is tabbed to the hull with fiberglass tape or if the sole is covered with a layer of glass. CAUTION! Do not cut into the hull laminate.*

3. Cut through the fiberglass at the sole/hull joint if the plywood is tabbed to the hull with fiberglass tape or if the sole is covered with a layer of glass *(Figure 6-1)*. Remember that this is not a 90° joint—the hull is angling toward the centerline. Make sure you are not going to cut into the hull laminate as you are cutting the tab. Remove all of the fasteners. The sole may be screwed to butt blocks between plywood sections, cleats attached to the hull at the perimeter, and stringers near the center of the sole. Pontoon decks will be screwed or bolted around the perimeter.
4. Remove the pieces of plywood. If you remove them carefully, you can use them as patterns for the new sole. If only a portion of the sole is damaged, you can cut out a section of the sole. If there is no structural member below it to make a good place for a joint, use cleats bonded under the edge of the remaining original deck to set the new plywood on.
   The sole may be bonded to the stringers and cleats supporting it. If necessary, cut the sole out in sections then chisel and grind away any material bonded to the tops of the stringers.

6.1.2 Installing the new sole

The moisture that damaged the plywood sole could have also damaged the stringers and floors supporting it. It's a good idea to inspect and repair all damage to the structure below the sole before reinstalling the sole. If the structure is in good shape, reinstall the sole as follows:

1. Cut out new pieces of plywood using careful measurements or the patterns from the old sole. Make sure the new plywood is at least the same thickness as the original material.
2. Dry fit the sections and drill any fastener holes, and then remove the section.
3. Coat the back side with two or three coats of epoxy before reinstalling to prevent moisture from penetrating the bottom of the new sole. It is also very important to completely seal the edges of the plywood and the fastener holes. Sealing the edges of the plywood is especially important at the edges of a deck on a pontoon boat. If using Douglas fir plywood, you should use a light layer of woven fiberglass fabric on both sides to prevent checking—6 oz glass is usually sufficient.
4. Bond the new plywood sole to the hull, to the stringers and floors, and to any cleats installed to support the edges of the plywood between stringers. Use a thick epoxy/adhesive filler mixture to bed the plywood into. For partial replacement of the plywood or multiple sheets of plywood, dish out the joint between plywood pieces with a grinder and join the pieces together with fiberglass tape to make a continuous panel.
   Or, in the case of a pontoon deck, install the new deck by screwing the plywood down to the stringers. Coat the fastener holes with epoxy before inserting the screws. This will prevent moisture from getting into the plywood end grain at the fastener holes. We usually coat or fiberglass the top side after the sole is installed.

6.1.3 Tabbing the sole to the hull

1. Prepare the hull surface for bonding by sanding a 4"–6" (10cm–15cm) wide strip on the hull above the sole with 80-grit paper.

2. Mix WEST SYSTEM epoxy and add either 406 Colloidal Silica or 407 Low Density filler to create a mixture with a peanut butter consistency.
3. Apply a fillet of thickened epoxy all along the hull-to-sole joint. This will fill any gap between the plywood and the hull and allow the fiberglass tabbing to lay easily across the joint .
4. Apply 4"-wide 727 Biaxial fiberglass tape over the fillet *(Figure 6-2)*. Wet out the tape with epoxy. If necessary apply multiple layers of tape to build up to the same thickness as the original tabbing. Stagger the edges of the tabbing when using multiple layers so they do not end in the same place on the hull side or sole. Apply the first layer up the side 3" (76mm)or so, the second layer 3" out on the sole, and the third layer centered over the corner. This creates an aggregate build up three layers thick on the corner without causing a hard spot at the edges of the tabbing. The tape can be applied over the uncured fillet or after it is thoroughly cured and sanded.

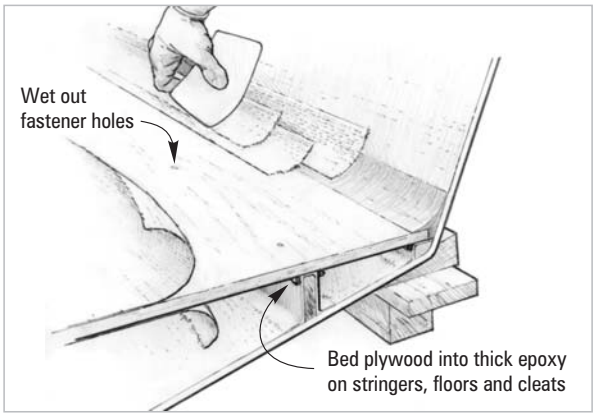

Figure 6-2 *Apply fiberglass tape over the fillet. Stagger the edges of the tabbing when using multiple layers so they do not end in the same place on the hull side or sole.*

5. Reinstall the carpeting or covering after the epoxy is cured. If painting the sole, make sure you wet sand the surface to remove all gloss before priming and painting or installing a teak surface. When reinstalling seats and deck hardware, be sure to seal the fastener holes with epoxy. This will prevent the same type of damage from recurring.

6.2 Installing a teak deck

Installing a teak deck is a practical and beautiful option for finishing a deck or sole repair, or for simply improving the looks and value of a boat. The thickness of the teak determines which of two methods are used to install it. With both methods, the teak is bonded to the substrate with epoxy. Bonding with epoxy not only seals the deck with an epoxy moisture barrier, but it eliminates the many fasteners that penetrate conventional teak decks and are often a source of leaks.

Thinner teak veneers (⅛"–¼") (3mm–6mm) can be applied to decks, seats, cabin tops or hatches without adding excessive weight. When installing veneers, the gap between the strips is filled with an epoxy/404/graphite mixture, to give you an authentic teak deck that is both durable and low in maintenance.

Thicker teak planks (¼"–¾") (6mm–19mm) are also bonded to the substrate, but the gap between planks is filled with a flexible caulk more suited to the greater expansion and contraction of thicker material. This is similar to traditional methods, but with the advantage of a reliable moisture barrier under the teak and no fasteners penetrating the substrate.

6.2.1 Installing teak veneers

Although strips of up to ¼" (6mm) thickness may be used, the effects of dimensional change can be limited by using thinner, ⅛" (3mm)-thick strips. A ⅛"-thick deck will provide you with years of service in high-traffic areas, and it will keep the additional weight of a new teak deck to a minimum. Strips should be 1½"–2" (38mm–50mm) wide, with edges planed smooth and straight. Leave the flat surfaces (top and bottom) rough sawn. The rough texture left by the saw im-

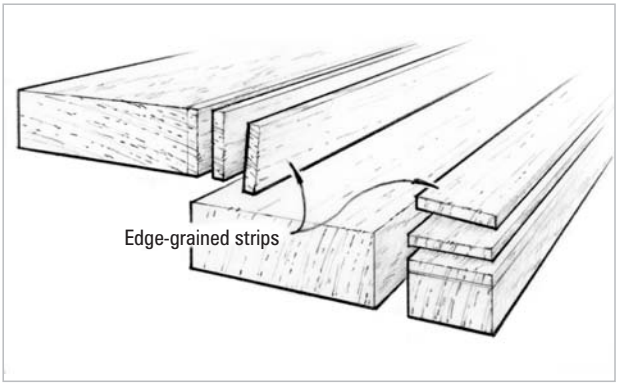

Figure 6-3 *Alternate methods for cutting edge-grained deck strips from rough-sawn teak planks.*

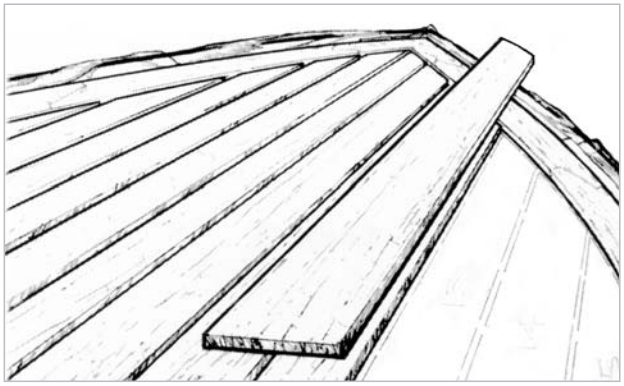

Figure 6-4 *Cut and fit the teak strips. Mask off and protect surrounding surfaces.*

proves the mechanical bonding characteristics of the strip. The remaining marks on the exposed surfaces will be sanded smooth after the new deck has been laid.

If you plan to mill your own stock, select a plank width that makes the most efficient use of the raw stock. Teak is generally available in 2"-thick, rough-sawn planks— you should get close to a 1¾" (45mm) finished dimension from these planks. Saw the stock so that the strips will be edge-grained *(Figure 6-3)*. This will minimize expansion and contraction of the wood and make a more attractive, even-wearing surface than will slab-grained strips. Select wood that is well seasoned.

Make all necessary repairs to the sole or deck structure before applying teak veneer. See Section 6.1 to repair a plywood deck. See Section 5 to repair a cored fiberglass laminate deck. Install a teak deck as follows:

1. Plan the location and pattern for the layout of the teak strips *(Figure 6-4)*. Cut the strips to fit and mark them for reference as necessary. Mask off the application area and cover the surrounding area with plastic for protection against spills.
2. Prepare the bonding surfaces. Wipe the bonding surfaces of the boat with a wax and silicone remover or solvent and a dry with a paper towel. Grind non-skid areas flat and abrade smooth surfaces with 50-grit sandpaper. Remove sanding dust.
   If any of the bonding surfaces of the teak are smooth, sand them with 50-grit sandpaper. Wipe the bonding surfaces of the teak strips, using paper towels with acetone or lacquer thinner, 30 minutes before bonding. This will help to improve epoxy penetration by removing some of the natural oil from the surface of the teak.
3. Place the first set of teak strips in the desired location and mark the bonding area and reference location points on the strips and deck. Place only the number of strips that can be applied during the open time of a batch of epoxy. The open time will vary with the resin/hardener combination you are using and the ambient temperature. Begin with a small area or number of strips.
4. Wet out the bonding surface of the first set of teak strips and the corresponding bonding area of the deck. Remember to solvent wipe the bonding surfaces of the teak 30 minutes before the wet-out.
   Apply a heavy layer of thickened epoxy to the wet-out deck surface. Thicken the resin/hardener mixture to a mayonnaise consistency with 404 High-Density filler. Then add enough 423 Graphite Powder to turn the mixture to an opaque black color. Apply enough thickened epoxy to bridge gaps between the strips and the deck and to squeeze up and fill the gap between the planks. A 809 Notched Spreader works well to apply an even layer over the deck. Be sure to leave reference marks uncovered.
5. Position the first set of strips on the deck. Use the reference marks as necessary.

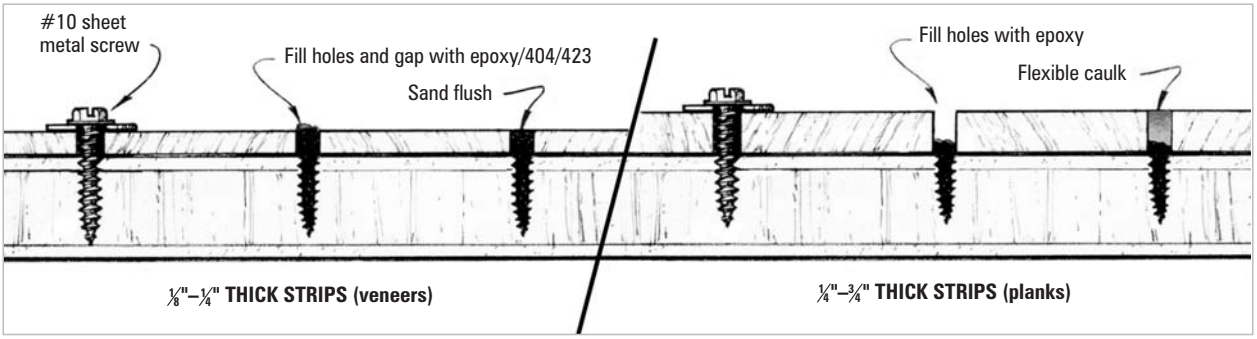

Figure 6-5 *Teak veneer and teak plank installations cross section. Clamp strips in position with #10 sheet metal screws and washers. Sand the surface of veneers and planks after the epoxy cures thoroughly. Caulk the gap between planks after sanding.*

6. Clamp the strips in place with #10 sheet metal screws and large washers. Place the screws and washers between the strips, 8" (20cm) apart. Each row of screws will clamp the edges of two adjoining planks and act as spacers *(Figure 6-5, left)*. Coat the screws and washers with a mold release (cooking nonstick spray) or place a small sheet of plastic under the washers to prevent bonding. Washers may also be cut from stiff plastic, thin wood lath covered with plastic, or similar stock with holes drilled for the screws. Push adjoining strips tight against the screws before tightening the screws completely. Tighten the screws enough to hold the strips firmly and force some of the epoxy mixture to squeeze up between the strips.
   Fill any voids between the planks with the epoxy/404/423 Graphite mixture and smooth the excess epoxy flush with the surface of the teak strips. Scrape up excess epoxy around the outside edges of the set of strips before the epoxy begins to gel.
7. Bond the remaining strips in place, several at a time, following the same procedure. Adjust the number of strips or size of the batch of epoxy as necessary. Allow the epoxy to cure thoroughly before removing clamps.
8. Remove the screws and washers within 24 hours. Tighten the screw slightly (5°) before backing it out. If you have difficulty removing a screw, heat the head with a soldering gun's cutter tip. While the screw is still hot, try to unscrew it again. Repeat until you are successful.
9. Fill the screw holes with epoxy/404/423 Graphite mixture. A syringe loaded with the mixture will speed the process. If the screws penetrated a panel, seal the back of the hole with duct tape before filling the hole.
10. Sand to level the surface and remove saw marks from the teak surface. Use a belt sander or disc sander with 50-grit sandpaper for the initial sanding. A commercial floor sander works well for large decks. Finish with 80-grit then 120-grit sandpaper. The teak surface may be left natural or finished with a marine-grade teak oil, marine varnish or WEST SYSTEM 105 Resin/207 Hardener and a high quality two-part polyurethane varnish.

6.2.2 Installing teak planks

An alternative method allows the use of teak strips up to ¾" (19 mm) thick. The top surface of a thick plank will expand and contract much more than the bottom, bonded surface of the plank, because the moisture content varies more at the top surface. Because of this expansion differential, a more yielding material such as flexible caulk is more appropriate for the upper portion of these joints. This method uses epoxy to bond planks to the substrate, but uses a flexible caulk to fill the gap between planks.

The steps for preparing and placing teak planks is the same as for installing veneers. Instead of filling the gap between strips with epoxy—as the planks are clamped down, clean excess epoxy out of the gap. Epoxy should fill no more than 1/3 of the height of the plank *(Figure 6-5, right)*. After the epoxy cures, remove the clamping screws and fill the fastener holes with epoxy as with the veneer method. Prepare the sides of the teak planks for bonding—they should be clean, dry

and sanded. Mask off the gaps to make caulking neater. Fill the remaining gap between planks with a flexible caulk such as polysulfide. Sand the deck smooth after the caulk has cured. ■

7 Installing Hardware

Hardware attachment is a critical and often overlooked element in a boat's structure. Over time, high-loads and fatigue can cause hardware fasteners to loosen, not only reducing the load carrying ability of the hardware, but creating a source for leaks into the laminate. Leaks at hardware locations are the most common cause of skin delamination and core damage. Often, the first indication of loose hardware is an area of delaminated deck nearby. This section provides procedures for the repair of hardware installations with the objective of improving the load carrying ability of the hardware, and eliminating hardware movement and leaks.

Standard hardware installations

Many factory hardware installations are inadequate for the loads on the hardware, which is evident if the installation is loose or leaking. Hardware items attached with multiple fasteners must have all of the mounting holes drilled precisely or the fasteners will not share the load equally. If not drilled accurately, the hole with the most highly-loaded fastener will elongate as the hardware is continually loaded. The hardware eventually becomes loose and the gap provides an entrance point for moisture.

The typical approach to this problem is to accept the hardware movement and to bed the hardware item in an elastic sealant material. A variety of sealants are used for this purpose, all with a very high elongation capability (usually 200% or greater) and good adhesive qualities. Unfortunately, high elongation means low load-carrying capability and the inability to prevent hardware from moving when subjected to any significant load. The sealant's job is limited to preventing water leakage. However, over time, continual hardware movement will break down sealant material, eventually allowing moisture to pass through into the laminate.

Improved hardware installations

To overcome the problems associated with hardware installations, West System has developed an approach called hardware bonding. The principle of hardware bonding is to eliminate all hardware movement by distributing the high, single-point loads of the hardware to as large an area of deck or hull laminate as possible. This is accomplished in two ways—by bonding all fasteners into the laminate to equalize their load carrying ability and by bonding the contact surface of the hardware item to the laminate surface. Proper hardware bonding techniques can dramatically improve the hardware's load-carrying capacity over hardware installed by standard methods. Bonded hardware becomes an integral part of a deck or hull and can perform long term without leak-causing movement.

In saltwater applications, our experience has been that bonded hardware and fasteners show excellent resistance to corrosion attack. Where fasteners are vulnerable to flexure and saltwater attack (i.e., hollow or bridged traveler tracks, bonded U-bolts or solitary eyebolts) a small silicone sealant fillet covering the joint between the cured epoxy and the fastener will protect against moisture and salt intrusion. Of course, any exposed metal surface will be subject to the effects of saltwater corrosion, therefore proper maintenance and cleaning procedures must be practiced.

7.1 Bonding fasteners

Bonding fasteners with epoxy is the most important part of hardware bonding and improving hardware load capacity. The techniques for bonding fasteners vary depending on the type of fastener, the substrate, the loads on the fastener, and any existing damage to the substrate. This section describes simple fastener bonding for several situations. Section 7.2 describes more advanced fastener bonding in combination hardware (base) bonding.

Basic fastener bonding

Normal vibration can cause hardware fasteners to loosen as fibers around the fasteners are fractured and compressed. A simple countermeasure is to:

1. Remove the loose fastener.
2. Clean the threaded hole with a cotton swab and solvent (such as acetone) to remove any wax, oil or other contaminate.
3. Wet out the hole with epoxy using a syringe, pipe cleaner or cotton swab.
4. Reinstall the fastener. The fastener can be waxed for easier removal.
   This technique will help retain the strength of the connection and prevent moisture penetration. Fastener connections that have lost strength or were under-engineered require a more extensive repair.

7.1.1 Bonding fasteners to non-cored panels

Hardware fasteners that are screwed to a non-cored panel without additional blocking rely entirely on the skin for holding power. If the fastener hole is stripped, the skin will provide little holding power for clamping or the hardware loads.

Panels with back access

Blocking, bonded to the back of the panel, will not only provide the holding power for clamping, but greatly increase the load carrying capability of the hardware. If you have access to the back of the panel, bond a plywood block to the inner side of the panel. The block should be thicker than the length of fasteners and cover an area beyond the perimeter of the fasteners. The larger the block, the greater the load transfer area. With the block in place, follow the basic fastener bonding procedure described above.

Panels without back access.

If a small fastener hole in a non-cored panel is stripped and you don't have access to the back of the panel, the hole can be plugged to regain some holding power. This technique is not recommended for high load applications.

1. Enlarge the stripped holes to at least ¼" (6mm) diameter or about twice the screw diameter.
2. Cut a cylinder or cube of flexible, open-cell foam with a cross section about twice the hole diameter.

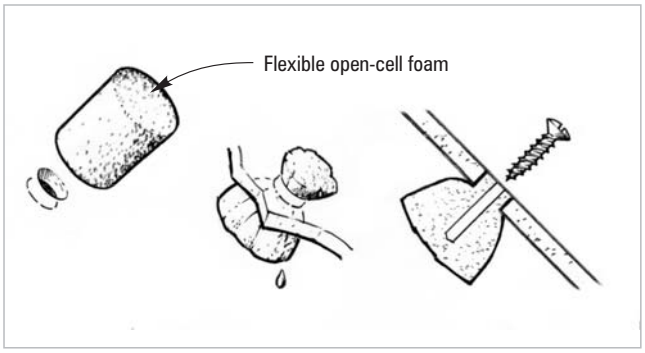

Figure 7-1 *Work the foam through the hole with a small stick or nail and allow the epoxy to cure thoroughly. Grind the foam flush with the surface and re-drill a pilot hole in the foam.*

3. Saturate the foam with epoxy and insert the foam into the hole. Work the foam through the hole with a small stick or nail. Allow the epoxy to cure thoroughly with most of the foam volume on the inside of the hole *(Figure 7-1)*.
4. Grind the foam flush with the surface and re-drill a pilot hole in the foam.
5. Wet out the pilot hole thoroughly with epoxy before reinstalling the hardware.
   The foam density, the depth of the plug, the amount of foam expansion in back of the hole, and the epoxy content of the foam all affect the holding power of the plug.

7.2 Bonding fasteners and hardware

Hardware can vary by size, type, and number of fasteners, and the size and direction of the load on the hardware. The panel may be cored or a single skin, with and often without blocking behind it. The hardware fasteners may be through-bolted with washers or a backer plate, or screwed to the skin and blocking, or simply to a single skin.

The following procedures describe repairs for through-bolted fasteners and for fasteners that do not pass through the panel. These repairs combine techniques for advanced fastener bonding and techniques for bonding the hardware base. Through-bolted fasteners are used on larger or more heavily loaded hardware. Fasteners that are screwed to the skin and core or blocking carry less load and should be used for lighter hardware. If the hardware is screwed to a cored or non-cored panel, follow the procedure in Section 7.2.2.

Bonding to metal—Bonding the metal hardware base to the substrate provides additional load transfer to the substrate. Proper surface preparation, beginning with thorough sanding, is crucial to getting a good mechanical bond to metal. Aluminum requires an additional two-step surface preparation. The first step involves the use of an acid conditioner that removes corrosion. The second step chemically stabilizes the surface and prevents oxidation, allowing time for coating or bonding. The WEST SYSTEM 860 Aluminum Etch Kit contains complete instructions.

7.2.1 Through-bolted fasteners–cored panels

Hardware bolted through a balsa or foam cored panel can be over-tightened or loaded enough to crush the skins and core material. Replacing the core with an epoxy mixture in the immediate area of the hardware installation will allow the panel to withstand the compression loads exerted by the fitting's through-bolts and nuts. Replacing a portion of the core with epoxy will also provide for better load distribution and protect the core from moisture.

It will be helpful to have a helper on the opposite side of the panel to handle nuts, backing plates and washers, and to control excess epoxy. If the hardware is through-bolted to a cored panel, prepare the panel and bond the hardware for increased load transfer as follows:

1. Remove the loose hardware and thoroughly clean dirt, paint, sealants, etc., from the hardware and the deck or hull surface. Wipe both surfaces with solvent to remove any residue or contaminants. Inspect for delamination or core damage and make the necessary core repairs before reattaching hardware (see Section 5). Cover interior areas below the hardware location with plastic for protection from spills and dirt.
2. Clean out the fastener holes and remove a portion of the core around the hole. Re-drill holes with an oversized bit or enlarge holes with a round file to increase bonding area. Drill through the outer skin and core only. Remove about ½" (12mm) of core material around the hole with a bent nail or an Allen wrench chucked into a drill motor *(Figure 7-2)*. The spinning nail or Allen wrench will pulverize the core material without damaging the skins, provided you are careful.
3. Seal the underside of the holes with duct tape and fill the holes completely with an epoxy/406 or 404 filler thickened to the consistency of mayonnaise. Allow the mixture to cure thoroughly.

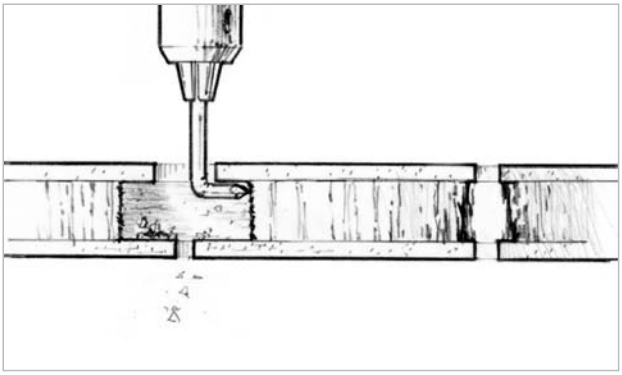

Figure 7-2 *Remove about ½" (12mm) of core material around the hole with a bent nail or an Allen wrench chucked into a drill motor.*

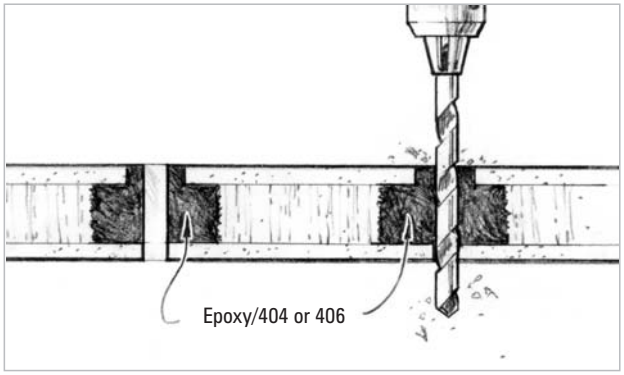

Figure 7-3 *Re-drill slightly oversized fastener holes through the cured epoxy.*

4. Temporarily place the hardware item in position and trace the outline of the base and the fastener holes with a pencil. Re-drill slightly oversized fastener holes through the cured epoxy (*Figure 7-3*).
5. Mask off the outside of the marked area and cover the area beyond the tape with plastic sheeting for protection from spills.
6. Thoroughly sand the surface within the masked area with coarse sandpaper to provide good mechanical keying for bonding.
   Sand the contact surface of the hardware item with coarse sandpaper to expose fresh metal. Mask off the area not to be bonded on the hardware item to prevent contamination. Re-tape the underside of the fastener holes to contain the epoxy.
7. Wet-out the deck surface, the inside of the fastener holes, the fastener threads and the sanded contact surface of the hardware with epoxy. While the hardware contact surface is still wet, abrade the coated surface with coarse sandpaper, working the epoxy into the metal surface. This technique exposes fresh metal directly to the epoxy without any air contact and the possibility of oxidation. The 860 Aluminum Etch Kit can be used to treat aluminum fittings before they are wet out. Insert the fasteners in the hardware.
8. Apply an epoxy/404 or 406 filler mixture, thickened to a peanut butter consistency, to one of the bonding surfaces. Apply enough of the mixture to bridge any gaps between the two surfaces. Apply the thickened mixture to both the fastener threads and the inside of the fastener holes.
   Apply enough thickened epoxy to the contact surface of the backer plate to bridge gaps between the backer and the inner surface of the panel. Since the backer plate is held in compression, its bond to the inner side of the panel is not critical. However, filling the gaps between the surfaces with epoxy will provide uniform bearing against the panel.
9. Place the hardware item in position on the surface, carefully inserting the bolts through the fastener hole. Have your helper on the inside of the panel cut an "X" through the tape over the fas-

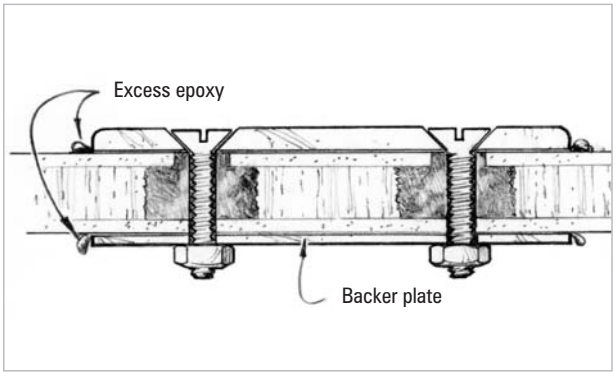

Figure 7-4 *Tighten the nuts until epoxy begins to squeeze from the sides of hardware item and backing plate.*

tener holes and guide the bolts through the slits in the tape. The tight fit of the tape around the bolts should keep most of the epoxy from squeezing out of the holes. Remove the tape after the bolts are in position.

10. Place the backing plate over the bolts in position against the inner side of the panel. Tighten the nuts until epoxy begins to squeeze from the sides of the hardware item and backing plate *(Figure 7-4)*. Do not over-tighten the fasteners. Clean away any squeezed out epoxy mixture with a chisel-shaped mixing stick and remove the masking before the epoxy begins to gel. Allow the epoxy to cure at least 24 hours before applying load to the hardware. Allow more time in cool weather. Tighten the nuts completely after the epoxy cures thoroughly.

    You may wish to upgrade a hardware attachment that was screwed into the laminate or through-bolted with washers instead of a backing plate. Often, adequate backing plates were not installed by the original manufacturer, causing hardware items to over-stress a localized area. You can increase the load carrying ability of the hardware and reduce stress concentrations by fabricating a plywood or metal backer and installing it as described above.

7.2.2 Screw type fasteners

If hardware is screwed to a cored or non-cored panel without additional blocking, the fasteners rely primarily on the skin for holding power. Bonding the fasteners in epoxy can greatly improve holding power by increasing the load transfer area around the fastener. If the hardware is screwed to a cored panel or a non-cored panel with blocking, prepare the panel and bond the hardware for increased load transfer as follows:

1. Remove the loose hardware and thoroughly clean dirt, paint, sealants, etc., from the hardware and the deck or hull surface. Wipe both surfaces with solvent to remove any residue or contaminants. If the panel is cored, inspect for delamination or core damage and make the necessary core repairs before reattaching hardware (see Section 5).

2. Drill an oversized hole around each existing fastener hole to increase the amount of skin and core area that the epoxy around the fastener can bond to. This may be much larger than the fastener—twice the fastener diameter, for example. If the fastener still has holding power at the bottom of the hole, drill the oversized hole 2/3 to 3/4 the depth of the fastener. This will leave material for the bottom threads of the fastener to bite into and provide some clamping pressure when the hardware is bonded in position *(Figure 7-5, left)*.

    In some cases (if the hardware is being mounted to a horizontal surface, for example) gravity or weight can provide enough clamping pressure to hold the hardware and the fasteners in position. In this case, drill the oversized hole to the full length of the fastener.

    If it's necessary for the fasteners to provide clamping pressure (on vertical surfaces, for example) and the existing hole is stripped and has no holding power, drill the oversized hole to the full length of the fastener and fill the hole at least 1/4 to 2/3 full with epoxy. If the surface is vertical or overhead, first wet out the hole with epoxy, then partially fill the hole with an epoxy/404 or 406 mixture thickened to a non-sagging consistency. After the epoxy has cured, drill a standard sized pilot hole in the epoxy to provide enough holding power for the fastener to clamp the hardware *(Figure 7-5, right)*. Place the hardware in position temporarily to locate the proper pilot hole locations.

    If the loose hardware was mounted to a non-cored (single-skin) panel without blocking, see Section 7.1.1.

3. Temporarily place the hardware item in position and trace the outline of the base and the fastener holes with a pencil.

4. Mask off the outside of the marked area and cover the area beyond the tape with plastic sheeting for protection from spills.

5. Thoroughly sand the surface within the masked area with coarse sandpaper to provide good mechanical keying for bonding.

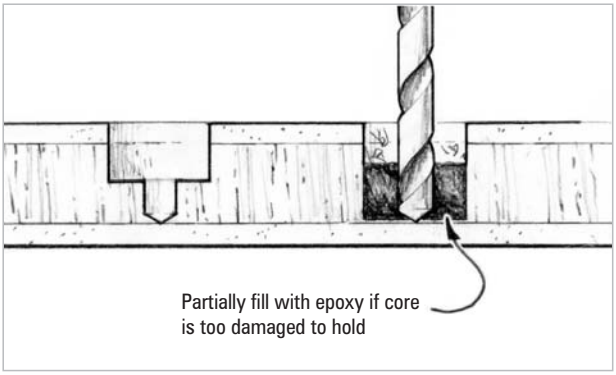

Figure 7-5 *Drill an oversized hole around each existing fastener hole to increase the fastener's bonding area and a standard sized pilot hole at the bottom of the oversized hole to provide holding power for the fastener to clamp the hardware.*

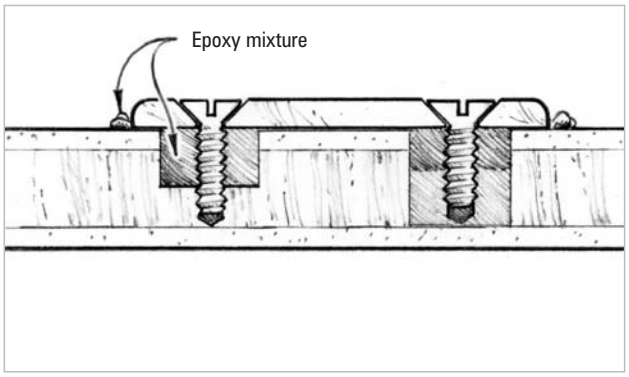

Figure 7-6 *Tighten the fasteners until a small amount of epoxy squeezes out of the joint.*

Sand the contact surface of the hardware item with coarse sandpaper to expose fresh metal. Mask off the area not to be bonded on the hardware item to prevent contamination.

6. Wet-out the deck surface, the inside of the fastener holes, the fastener threads and the sanded contact surface of the hardware with epoxy. While the hardware contact surface is still wet, abrade the coated surface with coarse sandpaper, working the epoxy into the metal surface. This technique exposes fresh metal directly to the epoxy without any air contact and the possibility of oxidation. The 860 Aluminum Etch Kit can be used to treat aluminum fittings before they are wet out.
7. Apply an epoxy/404 or 406 filler mixture, thickened to a peanut butter consistency, to one of the bonding surfaces. Apply enough of the mixture to bridge any gaps between the two surfaces. Inject or use a mixing stick to fill the fastener's holes with the thickened mixture. Use enough mixture so there will be no voids in the hole after inserting the fastener. Coat the fastener threads with the thickened mixture.
8. Place the hardware item in position. Insert and tighten the fasteners until a small amount of epoxy squeezes out of the joint. Do not over tighten *(Figure 7-6)*.
   If you are not relying on the screws to clamp the hardware in position, brace or weight the hardware until a small amount of epoxy squeezes from the joint. Be sure the fasteners are pushed tight against the hardware.
9. Clean the excess epoxy mixture that has squeezed out of the joint and remove the masking before the epoxy begins to gel.
10. Allow the epoxy to cure at least 24 hours before applying a load to the hardware. Allow more time in cool weather.

7.3 Casting epoxy bases for hardware

Occasionally, fittings must be set at specific angles to the hull or deck surfaces. Downrigger bases, lifeline stanchions, winches and turning blocks are all good examples. Traditionally, hand-carved, wedge-shaped shims have been used to achieve the proper angles with such fittings. Unfortunately, wooden shims require a great deal of time and carpentry skill. Hardware casting can save time and is easy to do—more importantly, it can result in a stronger, waterproof base. Cast the hardware at an angle to the surface as follows:

1. Prepare the bonding surfaces. Clean the substrate and hardware bonding surfaces with solvent to remove any contaminants. Sand the deck with 50-grit sandpaper. Apply a release agent, such as an automobile wax or a nonstick cooking spray, to the base of the hardware.

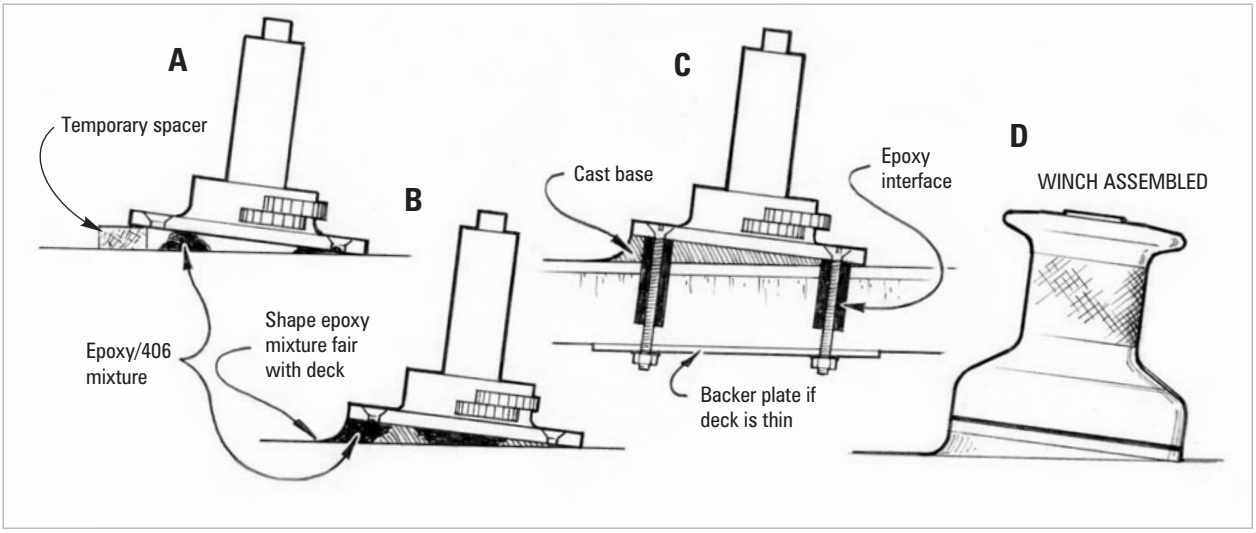

Figure 7-7 *Hardware casting is a variation of hardware bonding for fittings that must be mounted at specific angles to hull or deck surfaces or mounted to curved or uneven surfaces.*

2. Position the hardware. Mark the outline of the hardware and shim it to its desired angle. Mark the shim locations. Often one edge of the fitting will rest on the deck and become the zero point for the required angle.
3. Wet out the substrate (deck) surface with resin/hardener mixture except for the shim locations.
4. Cast epoxy supports under the hardware *(Figure 7-7a)*. Prepare a mixture of epoxy/404 filler, thickened to a peanut butter consistency. Use the mixing stick to place three portions of the mixture within the hardware outline, evenly spaced around the perimeter. Use enough of the mixture and pile the mixture high enough to contact the base of the hardware when it is shimmed in its proper position. When cured, the epoxy supports will take the place of the temporary shims. Set the fitting in place with the temporary shims holding the hardware at the proper height and angle. The bottom of the hardware should contact all three epoxy supports. Allow the epoxy supports to cure thoroughly.
5. Tap the hardware with a mallet to break it loose and remove the temporary shims. Mask off the area around the fitting with duct tape and plastic in case of accidental epoxy spills.
6. Prepare the deck and hardware for casting the base. Wash and sand the cured epoxy in the deck base area. Reapply mold release to the hardware base. At this time, mask off areas of the hardware that you don't want to come in contact with the epoxy. You may also find it helpful to place small pieces of tape over the holes in the hardware item to prevent the epoxy mixture from oozing up through them when the piece is repositioned.
7. Apply enough epoxy/404 mixture, thickened to a peanut butter consistency, to fill the entire base area. If the base to be cast is more than ½" (12mm) thick, use 206 Slow Hardener to reduce the possibility of exothermic heat buildup during the curing process. Build up the mixture slightly taller than the base supports, roughly forming the shape of the base. Fill all voids around the epoxy supports.
8. Reset the hardware in its proper location. Slowly press it into the proper position on top of the cast epoxy supports. Allow excess epoxy mixture to squeeze out of the gap between the base of the hardware and the deck. Sculpt the squeezed out mixture into the desired shape *(Figure 7-7b)*. A standard fillet works well in this situation (Section 9.4.3). Add extra mixture if necessary for shaping or to fill any voids. Remove any excess epoxy before it cures. Allow the epoxy to cure thoroughly.

9. Tap the hardware with a mallet to remove it from the base. Clean the bottom of the hardware and the top of the cast base with solvent to remove the mold release. Sand both bonding surfaces with 50-grit paper.
10. Sand the cast base to the desired final finish. Begin with 50-grit sandpaper or a file if the base is extremely irregular. Finish with 80-grit sandpaper.
11. Bond the hardware to the cast base using the hardware bonding procedure in Section 7.1.1 *(Figure 7-7c)*. Drill oversized and standard pilot holes for the fasteners through the cast base. Allow to cure at least 24 hours before reassembling or applying loads to the hardware. Allow more time in cool weather. Apply three coats of resin/hardener mixture to the base before final finishing.

7.4 Making fasteners removable

Testing at West System Inc. has shown that with bonded fasteners (screws, bolts, threaded rods, etc.), the adhesive bond to the metal is not as important as the "keying" between the epoxy and the threads of the fastener. This factor allows the builder to coat the fastener with a thin film of mold release before bonding to permit easy fastener removal after the epoxy cures.

Fatigue tests of bonded threaded rods with and without a thin coating of mold release show only a 4–10% reduction in the overall fatigue strength of the fastener with mold release. A thin film mold release will yield a more predictable performance than a thick film. Mold release may include paste wax, nonstick cooking spray, silicone spray or hair spray. While the reduction in strength of the fastener treated with mold release is slight, it should be taken into account when calculating hardware loads. We recommend adhesive bonding to all hardware and fasteners rather than the use of mold release whenever possible.

7.5 Removing bonded hardware

Occasionally it is necessary to remove bonded hardware items. At temperatures above 150°F (66°C), cured epoxy begins to lose its physical properties; the resin softens and its bonding capacity is reduced considerably. You can use this characteristic to your advantage when you would like to remove a piece of bonded hardware.

1. Remove all fasteners. If you used a release agent on them when you bonded the piece in place, they should come loose without too much difficulty. If the fasteners were bonded in, it will be necessary to apply heat to them, using a soldering iron. The epoxy around the fastener will soften enough to loosen the fastener when enough heat is conducted down the fastener.
2. Heat the fitting briefly with a propane torch. Protect the area around the fitting from heat damage by covering with water-soaked plywood. Allow the heat to conduct through the base of the hardware. A sharp rap with a mallet should be enough to dislodge the hardware. If the fitting doesn't break loose easily the first time, don't force it. Heat it a second time with the torch and try again.
3. Replace the hardware by following the procedures in Section 7.1.1. Re-drill the fastener holes in the existing epoxy as you would for a new installation. ■

8 Repairing Keels and Rudders

The thin foil shape that allows many keels and rudders to perform efficiently under water also makes them vulnerable to damage, especially from grounding. This section provides procedures to repair common problems of keels and rudders.

Modern, self-righting sailboats have either internal or external ballast keels. An external ballast keel is a foil shaped iron or lead casting, bolted to the outside of the hull. The keel bolts pass through the skin into the hull structure. An internal ballast keel involves placing the lead casting into a molded fiberglass hull cavity. The keel's outer foil shape is an extension of the hull's fiberglass skin surrounding a cast lead core.

8.1 Repairing internal ballast keels

Internally mounted ballast offers some structural advantages over external ballast, but presents some potential problems. When a boat with internal ballast is heavily grounded, the fiberglass skin takes the brunt of the collision. Unlike lead, the fiberglass laminate is not malleable, so repairs can become more complicated. Further, due to the difficulty builders encounter in trying to mate the cast lead ballast with the inside of the laminated keel pocket, irregularities and voids often occur between the lead and the fiberglass laminate. If moisture finds its way into these voids, additional delamination can occur, particularly in areas where freezing temperatures can cause expanding ice to further wedge the skin from the ballast.

Although the fiberglass laminate of the keel is generally much thicker than the hull and deck laminate, the procedure for the skin repair is the same as described in Section 4. Repair grounding damage to an internally ballasted keel as follows:

1. Remove all loose and damaged material to expose solid laminate in the damaged area and, if necessary, expose the lead core. Grind the edge of the laminate to a circular or oval shape and bevel the edge to a minimum 12-to-1 slope to provide a good bonding surface for the repair patch. Wear a dust mask!
2. Inspect for any voids and moisture between the laminate and the lead ballast. Tapping with a small hammer may help to reveal voids. Voids between the skin and the lead can be extensive and hold a lot of water. Often, water will drip or seep from a crack in the bottom of a keel for some time after a boat is pulled from the water. Drill 3⁄16" (5mm) holes through the laminate in areas of suspected voids. If water can be detected, drill a pattern of holes in that area to allow the void to dry out. Apply moderate heat to the area to speed drying. Flushing the void with denatured alcohol can help to remove moisture.
3. Fill all voids between laminate and the lead ballast with an epoxy/404 or 406 filler mixture, thickened to a catsup consistency, after the laminate and voids have been thoroughly dried. Use an 807 Syringe, with the tip cut back to fit the 3⁄16" (5mm) hole, to inject the mixture under pressure into the void (Figure 8-1). Fill the remaining holes in the laminate with an epoxy/404 or 406 filler mixture thickened to a mayonnaise consistency. Allow the epoxy to cure thoroughly. If voids are extensive, use an 810 Fillable Caulking Tube (with the appropriate sized drilled hole in the laminate) to fill the voids. If necessary, use multiple applications to avoid excessive exothermic heat buildup from filling too large a void at one time.

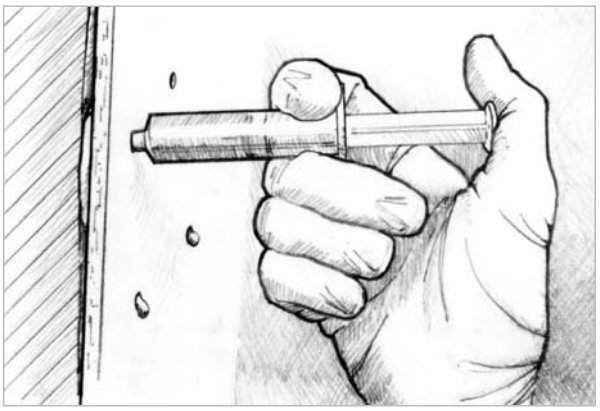

Figure 8-1 *Drill 3/16" holes through the laminate, in areas of suspected voids. Inject the mixture into the voids.*

4. Repair the lead surface if the impact was severe enough to dent or gouge the lead. Follow the procedures outlined below (Section 8.0.2).
   Apply an epoxy/406 filler mixture, thickened to a mayonnaise consistency, to the remaining voids in the damaged lead ballast, and a thin layer of the mixture to the beveled bonding surface of the laminate.
5. Apply a repair patch to the repair area following the procedure in Section 4.3 before the thickened epoxy layer begins to gel. Allow the patch to cure thoroughly. Sand and fair the patch and apply several coats of epoxy to the area. Wet sand the final coat after it has cured thoroughly and apply bottom paint.

8.2 Repairing external ballast keels

One of the advantages of using lead for an external keel, in addition to its high density, is its malleability. The lead will deform and thereby absorb some of the energy incurred upon impact or grounding. Its ability to deform reduces the intensity of shock loads to the hull and can prevent serious structural damage to a hull. However, the deformation of the lead keel can measurably affect overall sailing performance. Fortunately, repairing this type of damage is a relatively modest project. To repair an externally ballasted lead keel, deformed from impact or grounding, proceed as follows:

1. Be certain damaged area of the keel is accessible when the boat is hauled from the water. Dry the keel thoroughly. A heat gun or heat lamp will speed drying.
2. Remove any loose chips of lead or filling materials. Scrub the repair area with a wire brush to remove any remaining surface contamination and to expose fresh lead. Wear a dust mask!

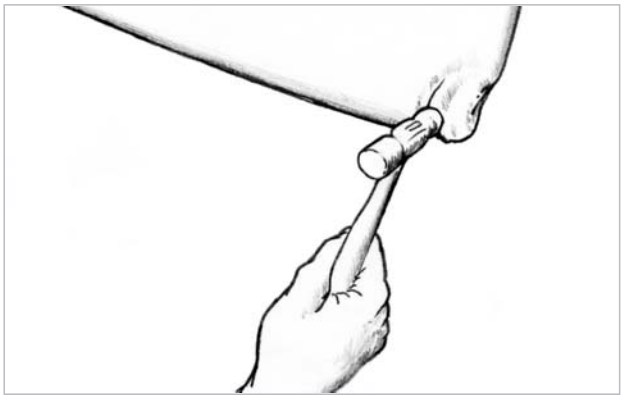

Figure 8-2 *Use a ball-peen hammer, with repeated light taps to work the lead bulge back to its original shape.*

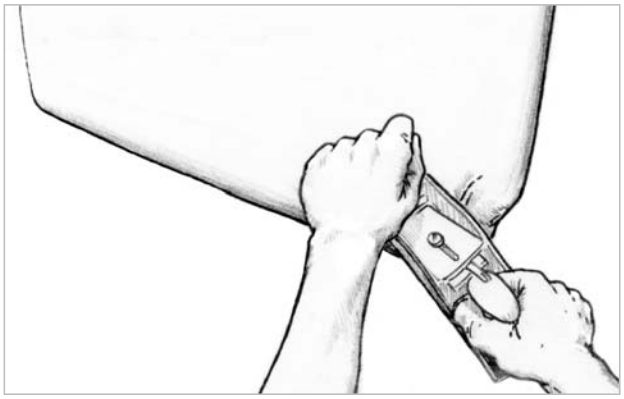

Figure 8-3 *Plane or file the remainder of the bulge flush after you have forged as much as is practical.*

3. Forge displaced lead toward voids with a ball-peen hammer. As the lead is deformed from an impact, it's common to find a bulge to one or both sides of a dent or gouge. Use repeated light taps to work the lead back to its original shape *(Figure 8-2)*. Too heavy a blow will shear sections of lead. With experience, you will soon be able to gauge how much force you can use and how much lead can be moved before shearing occurs. Some alloys are more malleable and easier to forge than others.
4. Plane or file the remainder of the bulge flush after you have forged as much as is practical *(Figure 8-3)*. For small areas, a body file works well. When greater amounts of lead must be removed, a woodworking plane is the best tool for the job. Apply a liberal coat of petroleum jelly to the lead surface. Adjust the plane's blade for a medium cut, and be certain the blade is sharp. Thoroughly clean the lead of any remaining petroleum jelly with solvent after the bulge has been faired. When the solvent has evaporated, scrub the surface vigorously with a wire brush to expose fresh lead.
5. Wet out the repair surface with epoxy. Brush the still-wet surface with a wire brush to expose fresh lead directly to the epoxy, avoiding any air contact and possibility of oxidation.
6. Fill the voids with an epoxy/407 low-density filler mixture thickened to a peanut butter consistency. Trowel the mixture into the voids and shape it to match the form of the keel *(Figure 8-4)*. If the volume of a void is larger than a golf ball, apply the mixture in several applications to avoid excessive exothermic heat buildup. Allow the mixture to cure thoroughly.

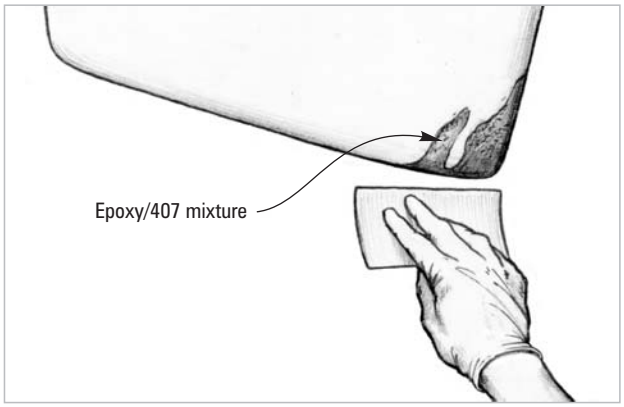

Figure 8-4 *Trowel the epoxy/407 mixture into the voids and shape it to match the form of the keel.*

7. Sand the cured mixture to the shape of the keel with a 50-grit sanding block. Fill any remaining voids with the epoxy/407 filler mixture thickened to a peanut butter consistency. Sand again when cured and coat the entire repair area with three coats of epoxy. Complete the final sanding and application of bottom paint after the final coat has cured thoroughly.

8.3 Templating keels and rudders

Few production boats achieve the designer's intended underwater shape and for most boats the difference is close enough. For those interested in getting a little more performance from their boat, most racing classes will allow the skipper to attempt to fair the hull closer to the designer's original specifications without having these changes considered "modifications".

Profile shape and section offsets are usually available from either the class association or the boat's designer. If foil profiles are not available, you may design your own foil shape. Information on lofting foil shapes for keels and rudders is available by calling or writing the West System technical staff. The object of this procedure is to reshape the keel or rudder to more closely match the designed foil shape. Although the procedure describes keel templating, the same procedure applies to rudders:

1. Obtain the profiles for three locations on the keel: the root (top of the keel near the hull attachment point), the midpoint and the tip of the keel. Enlarge the profiles as necessary to full size

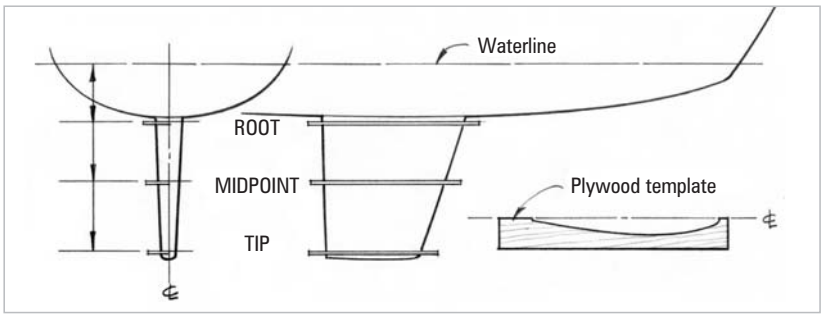

Figure 8-5 *Transfer the profiles from the root, midpoint, and tip of the keel to ½" (12mm) A/C-grade plywood. Mark the centerlines on the keel and on the templates.*

and transfer the profiles to ½" (12mm) A/C-grade plywood *(Figure 8-5)*. Cut out the three templates with a band saw or saber saw. Sand the edges of the foil shape carefully to eliminate any bumps or unfairness. Mark the keel's centerline on each end of the template. Seal the profile edge of the templates with a coat of epoxy and sand them smooth after the epoxy cures.

2. Prepare the area for bonding. Remove all paint. Wire brush the entire surface of external keels to remove any contamination and to expose fresh iron or lead. (Be sure to wear an appropriate dust mask, especially when sanding or wire brushing lead.) Sand the surface of internal keels (or hulls) to remove loose fillers and gelcoat and expose solid fiberglass laminate. Dry the keel using a hot air gun, hair dryer or heat lamp.
   Locate and mark the centerline on the leading edge and, if necessary, the trailing edge of the keel. Mark the template locations on both sides of the keel. Check the keel's profile with the templates to locate any high spots and to gauge how much fairing compound to apply to the low areas. Grind down or plane off excessive high spots.
3. Wet out 2"–3" wide strips at the template locations with epoxy. If you are working with a lead or metal keel, wire brush the surface while the epoxy is still wet for a better bond. Allow the epoxy to gel.
4. Apply a 1"–2" wide ridge of epoxy/407 or 410 filler mixture, thickened to a stiff peanut butter consistency, to the surface at each template location. Use a plastic squeegee to trowel on the fairing mixture slightly thicker than the finished profile. A squeegee notched to the shape of the ridge is helpful to shape the mixture.
5. Cover the ridges with strips of 879 Release Fabric to keep the fairing mixture from sticking to the template. Lightly press the release fabric to the ridge. Do not press hard enough to flatten the ridge.
6. Push the templates into the soft mixture to make an impression of the exact keel profile at each template location. To gauge the depth of the impression (height of the profile), push the template into the mixture until the centerlines marked on the template match the centerlines marked on the leading and trailing edges of the keel *(Figure 8-6)*. If an area of the ridge is too low to contact the template when it is properly aligned, squeeze the material under the release fabric upward so it comes in contact with the template. When you're satisfied, carefully remove the template, leave the release fabric in place, and allow the mixture to cure thoroughly.
7. Remove the release fabric and mark the center of the template impression with a permanent felt tipped marker to act as a sanding guide. Sand the ridges on either side of the template impression flush with the profile. Avoid sanding into the profile. You should be left with smooth bands of fairing compound at the root, midpoint and tip of the keel that will be used as profile guides to accurately apply the remaining fairing material. Use the templates to check the profiles and sand or add filler to the profile as necessary to match the template.
8. Wet out the surface between the guides with epoxy. Allow the coating to gel.
9. Mix enough epoxy/407 or 410 fairing compound to fill the area between two of the profile guides. Use the same filler and filler consistency used to make the guides. With a plastic squeegee or custom spreader, apply the mixture to the middle area of the foil. Leave the mixture higher than the guides.

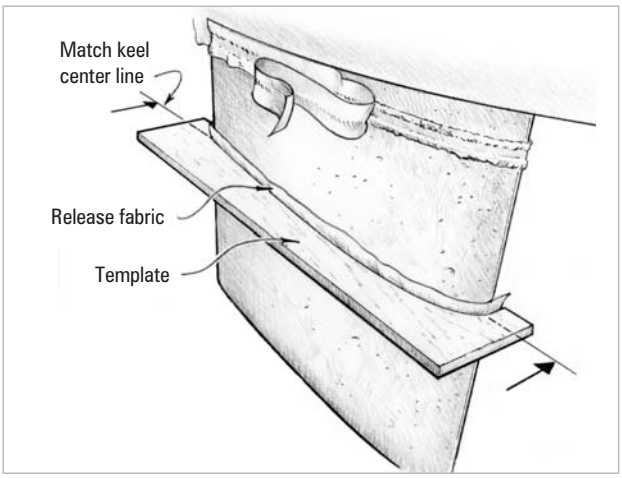

Figure 8-6 *Make an impression of each template profile in the epoxy mixture. Sand the excess mixture flush with the profile after the mixture has cured.*

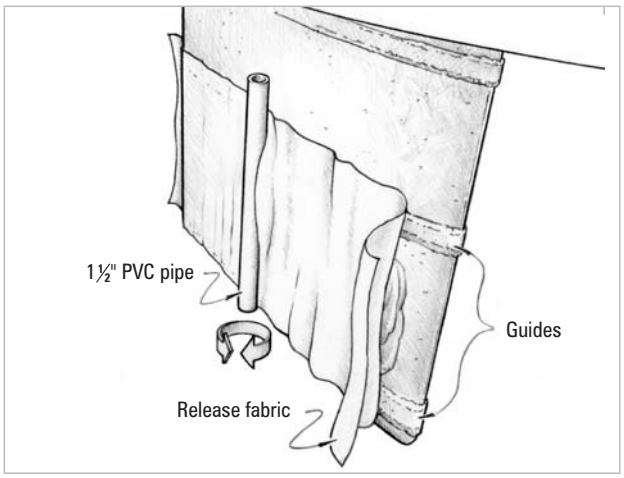

Figure 8-7 *Using the cast template profiles as guides, drag a batten across the profiles to level the fresh epoxy mixture flush with the three profiles.*

10. Lay a precut piece of release fabric over the fairing compound. The fabric should be large enough to cover the entire area from guide to guide. Using a length of 1½" diameter PVC pipe cut to span two of the guides, shape the fairing mixture flush with the guides. Beginning in the middle of the foil, roll the pipe back and forth, as you would a rolling pin, forcing fairing compound under the release fabric toward the leading and trailing edges of the foil *(Figure 8-7)*. Adjust the angle of the pipe as you approach the edges of the foil to finish with the pipe parallel to the leading and trailing edges. With the proper amount of fairing compound, a small amount of excess will squeeze from the leading and trailing edge. To give yourself adequate working time in warmer temperatures, use 206 or 209 Hardener. Allow the fairing mixture to cure thoroughly.

11. Remove the release fabric. Repeat the process on the remaining areas. Fill any large remaining low areas using the same procedure after the fairing compound has cured. Repeat as necessary until you are satisfied with the shape and fairness of the surface.

12. Sand the cured surface as necessary. It should require only minor local fairing. When you are satisfied with the fairness and smoothness, apply an epoxy barrier coat and finish as described in Section 2.

8.4 Repairing worn rudder bearings

Common wear points on sailboats with spade-type rudders are the bearings that support the rudder shaft. Worn bearings can result in sloppy steering and an irritating thump as the rudder shaft flops from side to side in the enlarged bearing. Worn bearings can also detract from the precise sense of feel, especially important to a helmsman if the boat is raced.

Most stock rudders simply bear on the inside of the fiberglass housing in which the metal rudder shaft turns *(Figure 8-8)*. Some builders use Delrin™ plastic or a similar material as an insert for lower friction and better wearing performance. But the high loads exerted by the rudder eventually wear out the bearings. This section describes how to restore tight steering control by injecting a new, long-wearing epoxy/graphite bearing surface around the rudder shaft.

The amount of slop in the rudder bearings is most easily detected when the boat is out of the water. Grab the bottom of the rudder blade and wiggle it side to side. Look for excess lateral motion of the rudder blade and listen for the thump of the shaft hitting the opposite side of the bearing as the rudder is wiggled. Careful observation will show if the movement is coming from the lower, upper or both bearing points.

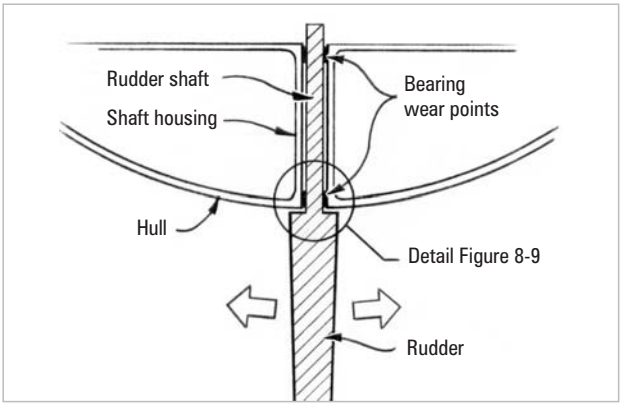

Figure 8-8 *Most stock rudders simply bear on the inside of a fiberglass housing and the high loads exerted by the rudder eventually wear out the bearing surfaces.*

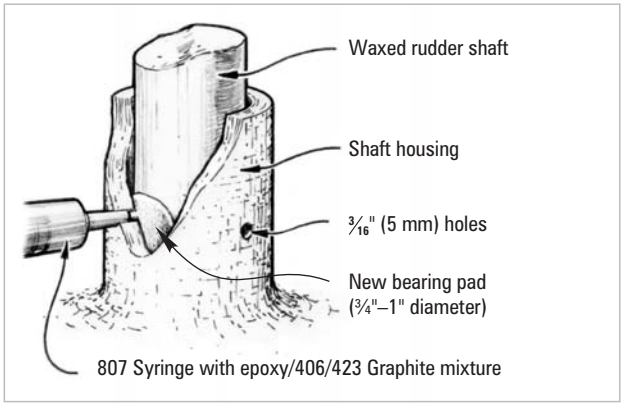

Figure 8-9 *Inject enough of epoxy/406/423 mixture through the drilled 3⁄16" (5 mm)-diameter ports to form a 3⁄4"–1" diameter pad between the shaft and housing at each port.*

1. Lower the rudder from the boat and wipe the shaft with solvent to remove grease and oil. Inspect the shaft for roundness and straightness. IMPORTANT! If the shaft is out of round or bent, you may need to take it to a machine shop to make it true. Look for burrs, rough spots or grooves. Sand smooth any burrs or other rough spots on the shaft with emery cloth or very fine sandpaper. The smoother the surface of the shaft, the less it will abrade the bearing surface. If scores or similar flaws are too deep to sand out, fill them with an epoxy/406 Colloidal Silica mixture following the procedures for bonding to metal as discussed in Section 7.
2. Wipe the upper and lower bearing surfaces with solvent to remove all traces of grease or oil. Sand the bearing surfaces with coarse sandpaper. Drill three, equally spaced 3⁄16" (5 mm) diameter holes through the shaft housing *(Figure 8-9)* at the level of the bearing surfaces. These "ports" will permit injection of the thickened epoxy to form the new bearing surfaces. Cut the end of an 807 Syringe to wedge tightly into the 3⁄16" holes. This will allow you to inject the thickened mixture under pressure into the gap between the shaft and the bearing surface.
3. Wax the shaft surface with three coats of automotive paste wax to act as a release agent and prevent the shaft from bonding to the new bearing surface.
   Replace the rudder in the boat and sight the rudder to make sure that it is vertical. The keel will serve as a good reference point. Brace the rudder to prevent movement.
4. Prepare a bearing mixture of epoxy and a blend of 50% 406 Colloidal Silica and 50% 423 Graphite Powder. The epoxy/406/423 mixture should have the consistency of mayonnaise to prevent running or sagging. Load the mixture into a syringe.
5. Inject enough of the material through each of the three drilled ports to create a 3⁄4"–1" diameter pad between the shaft and the housing at each port. Be careful not to move the rudder shaft until the mixture cures thoroughly.
6. Break the shaft free by grasping the rudder blade and twisting it. If the cured bearing pads are too tight after rotating the rudder briefly (which is not typical), remove the rudder and apply a buffing compound to the rudder shaft. Reinstall the rudder and work it back and forth until it turns freely in the new bearings.
   Lower the rudder once more and thoroughly clean any remaining mold release or buffing compound from the shaft and bearing surfaces. Spread a thin layer of waterproof grease on the shaft and reinstall the rudder.

   This technique is useful for restoring a variety of bearing surfaces. The epoxy/406/423 Graphite mixture provides a hard, low-friction bearing surface. The durability of the bearing depends a great deal on the smoothness of the surface sliding against it. ■

9 Using WEST SYSTEM® Epoxy

This section is designed to help you understand and safely handle WEST SYSTEM epoxy products and to provide the basic techniques used in most repair and building operations. Refer to the WEST SYSTEM *User Manual & Product Guide* for more complete product information.

9.1 Epoxy safety

Epoxies are safe when handled properly. To use WEST SYSTEM epoxies safely, you must understand their hazards and take precautions to avoid them.

Hazards

The primary hazard associated with epoxy involves skin contact. WEST SYSTEM resin may cause moderate skin irritation. WEST SYSTEM hardeners are corrosive and may cause severe skin irritation. Resins and hardeners are also sensitizers and may cause an allergic reaction similar to poison ivy. Susceptibility and the severity of a reaction varies with the individual. Although most people are not sensitive to WEST SYSTEM Resins and Hardeners, the risk of becoming sensitized increases with repeated contact. For those who become sensitized, the severity of the reaction may increase with each contact. The hazards associated with resins and hardeners also apply to the sanding dust from epoxy that has not fully cured. These hazards decrease as resin/hardener mixtures reach full cure. Refer to product labels or Material Safety Data Sheets for specific product warnings and safety information.

Precautions

1. Avoid contact with resin, hardeners, mixed epoxy and sanding dust from epoxy that is not fully cured. Wear protective gloves and clothing whenever you handle WEST SYSTEM epoxies. Barrier skin creams provide additional protection. If you do get resin, hardener or mixed epoxy on your skin, remove it as soon as possible. Resin is not water soluble—use a waterless skin cleanser to remove resin or mixed epoxy from your skin. Hardener is water soluble—wash with soap and warm water to remove hardener or sanding dust from your skin. Always wash thoroughly with soap and warm water after using epoxy. Never use solvents to remove epoxy from your skin.
   Stop using the product if you develop a reaction. Resume work only after the symptoms disappear, usually after several days. When you resume work, improve your safety precautions to prevent exposure to epoxy, its vapors, and sanding dust. If problems persist, discontinue use and consult a physician.
2. Protect your eyes from contact with resin, hardeners, mixed epoxy, and sanding dust by wearing appropriate eye protection. If contact occurs, immediately flush the eyes with water under low pressure for 15 minutes. If discomfort persists, seek medical attention.
3. Avoid breathing concentrated vapors and sanding dust. WEST SYSTEM epoxies have low VOC content, but vapors can build up in unvented spaces. Provide ample ventilation when working with epoxy in confined spaces, such as boat interiors. When adequate ventilation is not possible, wear a NIOSH (National Institute for Occupational Safety and Health) approved respirator with an organic vapor cartridge. Provide ventilation and wear a dust mask when sanding epoxy,

especially uncured epoxy. Breathing uncured epoxy dust increases your risk of sensitization. Although epoxy cures quickly to a sandable solid, it may take over two weeks at room temperature, or post-curing, to cure completely.

4. Avoid ingestion. Wash thoroughly after handling epoxy, especially before eating or smoking. If epoxy is swallowed, drink large quantities of water—DO NOT induce vomiting. Because hardeners are corrosive, they can cause additional harm if vomited. Call a physician immediately. Refer to First Aid procedures on the Material Safety Data Sheet.
5. KEEP RESINS, HARDENERS, FILLERS AND SOLVENTS OUT OF THE REACH OF CHILDREN.
   For additional safety information or data, write to: EPOXY SAFETY, West System Inc., P.O. Box 908, Bay City, MI 48707 USA

9.1.1 Cleanup

Contain large spills with sand, clay or other inert absorbent material. Use a scraper to contain small spills and collect as much material as possible. Follow up with absorbent towels. Uncontaminated resin or hardener may be reclaimed for use. DO NOT use saw dust or other fine cellulose materials to absorb hardeners. DO NOT dispose of hardener in trash containing saw dust or other fine cellulose materials—spontaneous combustion can occur.

Clean resin or mixed epoxy residue with lacquer thinner, acetone or alcohol. Follow all safety warnings on solvent containers. Clean hardener residue with warm soapy water.

Dispose of resin, hardener and empty containers safely. Puncture a corner of the can and drain residue into the appropriate new container of resin or hardener. DO NOT dispose of resin or hardener in a liquid state. Waste resin and hardener can be mixed and cured (in small quantities) to a non-hazardous inert solid.

CAUTION! Large pots of curing epoxy can get hot enough to ignite surrounding combustible materials and give off hazardous fumes. Place pots of mixed epoxy in a safe and ventilated area, away from workers and combustible materials. Dispose of the solid mass only if curing is complete and the mass has cooled. Follow federal, state or local disposal regulations.

9.2 Epoxy products

This section provides a short description of WEST SYSTEM resin, hardeners and fillers. Refer to the current *User Manual & Product Guide* for complete information on all WEST SYSTEM products

9.2.1 Resin and hardeners

Resin

105 Resin—A clear, light-amber, low-viscosity, epoxy resin that can be cured in a wide temperature range to yield a high-strength, rigid solid that has excellent cohesive properties and is an outstanding bonding adhesive and moisture vapor barrier. Two types of WEST SYSTEM hardeners are formulated for use with 105 Resin. 205 and 206 Hardeners require a 5 part resin-to-1 part hardener mixing ratio. 207 and 209 Hardeners require a 3-to-1 mixing ratio.

Hardeners

205 Hardener—Used for general bonding, barrier coating and fabric application. Formulated to cure at lower temperatures and to produce a rapid cure that develops its physical properties quickly at room temperature. 5:1 mix ratio.

206 Slow Hardener—Used for general bonding, barrier coating and fabric application. Formulated for a longer working and cure time or to provide adequate working time at higher temperatures. 5:1 mix ratio.

Note: 205 Fast and 206 Slow Hardener may be blended for intermediate cure times. Always maintain the proper 5 part resin to 1 part hardener ratio. Do not mix 205 or 206 (5-to-1 ratio) Hardeners with 207 or 209 (3-to-1 ratio) Hardeners.

207 Special Coating Hardener—Formulated specifically for barrier coating and fabric application where *clear finish* is desired. 207 contains a UV stabilization additive, but still requires long term UV protection with paint or varnish. It provides good physical properties for bonding, but it is more difficult to thicken and less cost effective for this purpose than 205 or 206 hardener. 207 is a light amber color that will tint wood slightly darker and warmer, similar to varnish. 3:1 mix ratio.

209 Extra Slow Hardener— Used for general bonding, barrier coating and fabric application in extremely warm and/or humid conditions. Provides approximately twice the pot life and working time as 206 Slow Hardener and adequate pot life up to 110°F (43°C). Also used at room temperatures when a long pot life and working time are required. 3:1 mix ratio.

Hardener Selection Guide

Figure 9-1
Select a hardener for its intended use and for the cure speed best suited for your job, in the temperature range you are working in.

HARDENER	RESIN/HARDENER USE	HARDENER TEMPERATURE RANGE (°F)* (Room Temp.; 40° 50° 60° 70° 80° 90° 100°)	CURE SPEEDS at room temperature*		
			POT LIFE 100g cupful	OPEN TIME thin film	CURE TO SOLID thin film
205	General bonding and coating		9–12 minutes	60–70 minutes	6–8 hours
206	General bonding and coating		20–25 minutes	90–110 minutes	10–15 hours
207	Clear coating		22–27 minutes	110–130 minutes	12–18 hours
209	General bonding and coating		40–50 minutes	3–4 hours	20–24 hours

*Epoxy cures faster in warmer temperatures and in thicker applications—Epoxy cures slower in cooler temperatures and in thinner applications.

9.2.2 Fillers

Throughout this manual, we will refer to *epoxy* or *resin/hardener mixture*, meaning mixed resin and hardener without fillers added; and *thickened mixture* or *thickened epoxy*, meaning resin/hardener with one of six fillers added.

Fillers are used to thicken the epoxy for specific applications. They are categorized as either **Adhesive Fillers**—used for structural bonding or gluing, and gap-filling; or **Fairing Fillers**—used for cosmetic surface filling. Although each filler has unique handling and cured characteristics that make it more suitable for some jobs than others *(Figure 3-2)*, for *most* bonding applications any of the adhesive fillers can be used. And for *most* surface filling, either of the fairing fillers can be used. Fillers may also be blended for intermediate characteristics.

Adhesive fillers

403 Microfibers—For general bonding and gap filling. Epoxy/403 mixtures have superior gap-filling qualities and good strength for most bonding applications while retaining wetting/penetrating capabilities. Works especially well with porous woods. Cures to an off-white color.

404 High-Density Filler—For hardware fastener bonding and applications that require maximum physical properties and where high-cyclic loads are anticipated. Also used for gap-filling where maximum strength is necessary. Cures to an off-white color.

405 Filleting Blend—For use in bonding and filleting on naturally finished wood projects. A strong, wood-toned filler that mixes easily and spreads smoothly. Cures to a brown color and can be used to tint other fillers.

406 Colloidal Silica—For general bonding, gap-filling, high-strength bonds and fillets. A practical and versatile, smooth-textured filler. Can be used alone or mixed with other fillers to improve workability and smoothness. Cures to an off-white color.

Fairing fillers

407 Low-Density Filler—A blended microballoon-based filler used to make a fairing compound that is easy to sand or carve while still being reasonably strong on a strength-to-weight basis. Cures to a reddish-brown color.

410 Microlight™—A very low-density filler for creating a light, easily-worked fairing compound. 410 spreads smoothly and sands very easily when cured. Not recommended under dark colored paint or on other surfaces subject to high temperatures. Cures to a light tan color.

See Appendix A for additional filler selection information.

Filler Selection Guide

Figure 9-2 *Suitability of WEST SYSTEM fillers for various applications.*

USES Resin/Hardener mixture thickened with a Filler Use description—desired characteristics	ADHESIVE FILLERS Highest density Highest strength				FAIRING FILLERS Lowest density Easiest Sanding	
	404 High-Density	**406** Colloidal Silica	**403** Microfibers	**405** Filleting Blend	**407** Low-Density	**410** Microlight™
Bonding Hardware—Increase fastener interface and hardware load capability—maximum strength	★★★★	★★★	★★★	★★		
General Bonding—Join parts with epoxy thickened to create a structural gap filler—strength/gap filling	★★★	★★★	★★★	★★	★	
Bonding with Fillets—Increase joint bonding area and create a structural brace—smoothness/strength	★★	★★★★	★★	★★★	★★★	
Laminating—Bond layers of wood strips, veneers, planks, sheets and cores—gap filling/strength	★★	★★★	★★★★	★★	★★	
Fairing—Fill low areas/voids with an easily shaped and sanded surface filler—sandability/gap filling					★★★	★★★★

Filler suitability: ★★★★=excellent, ★★★=very good, ★★=good, ★=fair, no stars=not recommended

Use higher strength fillers when bonding higher density materials, such as hardwoods or metal. Any adhesive filler is suitable for most bonding situations. Your choice of a filler for general use may be based on the handling properties you prefer. Fillers may also be blended to provide intermediate properties.

9.3 Handling epoxy

This section explains the fundamentals of epoxy curing and the steps for proper dispensing, mixing, and adding fillers to assure that every batch of epoxy cures to a useful high-strength solid.

9.3.1 Understanding epoxy's cure stages

Mixing epoxy resin and hardener begins a chemical reaction that transforms the combined liquid ingredients to a solid. The time it takes for this transformation is the **cure time**. As it cures the epoxy passes from the liquid state, through a gel state, before it reaches a solid state *(Figure 9-3)*.

1. Liquid—Open time

Open time (also working time or wet lay-up time) is the portion of the cure time, after mixing, that the resin/hardener mixture remains a *liquid* and is workable and suitable for application. All assembly and clamping should take place during the open time to assure a dependable bond.

2. Gel—Initial cure phase

The mixture passes into an initial cure phase (also called the green stage) when it begins to *gel*, or "kick off". The epoxy is no longer workable and will progress from a tacky, gel consistency to the firmness of hard rubber. You will be able to dent it with your thumb nail.

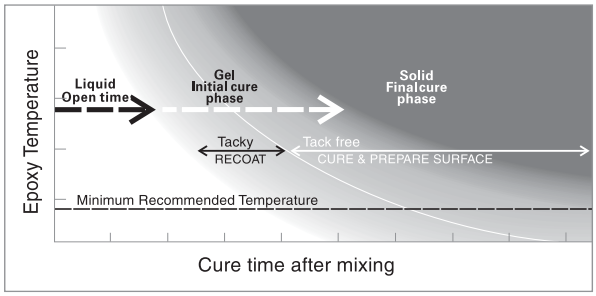

Figure 9-3 *As it cures, mixed epoxy passes from a liquid state, through a gel state, to a solid state.*
←Cure time is shorter when the epoxy is warmer.

←Cure time is longer when the epoxy is cooler.

The mixture will become tack free about midway through the initial cure phase. While it is still tacky, a new application of epoxy will still chemically link with it, so the surface may still be bonded to or recoated *without special preparation*. However, this ability diminishes as the mixture approaches the final cure phase.

3. Solid—Final cure phase

The epoxy mixture has cured to a *solid* state and can be dry sanded and shaped. You should not be able to dent it with your thumbnail. At this point the epoxy has reached about 90% of its ultimate strength, so clamps can be removed. It will continue to cure over the next several days at room temperature.

A new application of epoxy will no longer chemically link to it, so the surface of the epoxy *must be properly prepared and sanded* before recoating to achieve a good mechanical, secondary bond. *See 9.4.1—Surface Preparation*.

9.3.2 Understanding and controlling cure time

Open time and cure time govern much of the activity of building and repairing with epoxy. Open time dictates the time available for mixing, application, smoothing, shaping, assembly and clamping. Cure time dictates how long you must wait before removing clamps, or before you can sand or go on to the next step in the project. Two factors determine an epoxy mixture's open time and overall cure time—*hardener cure speed* and *epoxy temperature*.

Hardener speed

Each hardener has an ideal temperature cure range *(Figure 9-1)*. At any given temperature, each resin/hardener combination will go through the same cure stages, but at different rates. Select the hardener that gives you adequate working time for the job you are doing at the temperature and conditions you are working under. The product guide and container labels describe hardener pot lives and cure times.

Pot life is a term used to compare the cure speeds of different hardeners. It is the amount of time a specific mass of mixed resin and hardener remains a liquid at a specific temperature. (A 100g-mass mixture in a standard container, at 72°F). Because pot life is a measure of the cure speed of a specific contained mass (volume) of epoxy rather than a thin film, a hardener's pot life is much shorter than its open time.

Epoxy temperature

The warmer the temperature of curing epoxy, the faster it cures *(Figure 9-3)*. Curing epoxy's temperature is determined by the *ambient temperature* plus the *exothermic heat* generated by its cure.

Ambient temperature is the temperature of the air or material in contact with the epoxy. Air temperature is most often the ambient temperature unless the epoxy is applied to a surface with a different temperature. Generally, epoxy cures faster when the air temperature is warmer.

Exothermic heat is produced by the chemical reaction that cures epoxy. The amount of heat produced depends on the thickness or exposed surface area of mixed epoxy. In a thicker mass,

more heat is retained, causing a faster reaction and more heat. The mixing container shape and mixed quantity have a great affect on this exothermic reaction. A contained mass of curing epoxy (8 fl. oz. or more) in a plastic mixing cup can quickly generate enough heat to melt the cup and burn your skin. However, if the same quantity is spread into a thin layer, exothermic heat is dissipated, and the epoxy's cure time is determined by the ambient temperature. The thinner the layer of curing epoxy, the less it is affected by exothermic heat, and the slower it cures.

Controlling cure time

In warm conditions use a slower hardener, if possible. Mix smaller batches that can be used up quickly, or quickly pour the epoxy mixture into a container with greater surface area (a roller pan, for example), thereby allowing exothermic heat to dissipate and extending open time. The sooner the mixture is transferred or applied (after thorough mixing), the more of the mixture's useful open time will be available for coating, lay-up or assembly.

In cool conditions use a faster hardener or use supplemental heat to raise the epoxy temperature above the hardeners minimum recommended application temperature. Use a hot air gun, heat lamp or other heat source to warm the resin and hardener before mixing or after the epoxy is applied. At room temperature, supplemental heat is useful when a quicker cure is desired.

CAUTION! Heating epoxy that has not gelled will lower its viscosity, allowing the epoxy to run or sag more easily on vertical surfaces. In addition, heating epoxy applied to a porous substrate (soft wood or low density core material) may cause the substrate to "out-gas" and form bubbles in the epoxy coating. To avoid outgassing, wait until the epoxy coating has gelled before warming it. Never heat mixed epoxy in a liquid state over 120°F (49°C).

Regardless of what steps are taken to control the cure time, thorough planning of the application and assembly will allow you to make maximum use of the epoxy mixture's open time and cure time.

9.3.3 Dispensing and mixing

Careful measuring of epoxy resin and hardener and thorough mixing are essential for a proper cure. Whether the resin/hardener mixture is applied as a coating or modified with fillers or additives, observing the following procedures will assure a controlled and thorough chemical transition to a high-strength epoxy solid.

Dispense the proper proportions of resin and hardener into a clean plastic, metal or wax-free paper container. Don't use glass or foam containers because of the potential danger from exothermic heat build-up. DO NOT attempt to alter the cure time by altering the ratio. An accurate ratio is essential for a proper cure and full development of physical properties.

Dispensing with Mini pumps

Most problems related to curing of the epoxy can be traced to the wrong ratio of resin and hardener. To simplify metering, we recommend using WEST SYSTEM Mini Pumps to dispense the resin and hardener. Mini Pumps mount onto the resin and hardener containers and are calibrated to deliver the proper working ratio of resin to hardener.

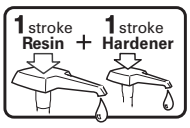

Pump one full pump stroke of resin for each one full pump stroke of hardener. Depress each pump head fully and allow the head to come completely back to the top before beginning the next stroke *(Figure 9-4)*. Partial strokes will give the wrong ratio. Read the pump instructions before using pumps.

Before you use the first mixture on a project, verify the proper ratio according to the instructions that come with the pumps. Recheck the ratio anytime you experience problems with curing.

Dispensing without Mini Pumps—Weight/volume measure

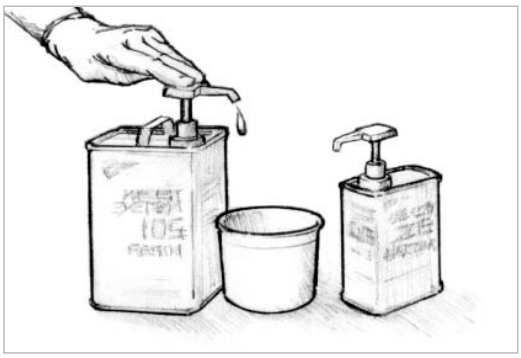

Figure 9-4 *Dispense the proper proportions of resin and hardener.*

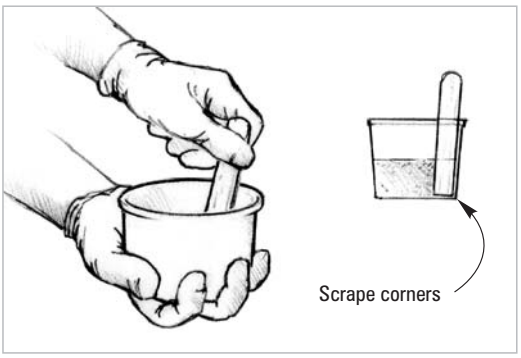

Figure 9-5 *Stir resin and hardener together thoroughly, at least one minute—longer in cooler temperatures.*

To measure 105 Resin and 205 or 206 Hardener by weight or volume, combine 5 parts resin with 1 part hardener. To measure 105 Resin and 207 or 209 Hardener by volume, combine 3 parts resin with 1 part hardener (by weight, 3.5 parts resin-to-1 part hardener).

First time users—If this is the first time you have used WEST SYSTEM epoxy, begin with a small test batch to get the feel for the mixing and curing process before applying the mixture to your project. This will demonstrate the hardener's open time for the temperature you are working in and assure you that the resin/hardener ratio is metered properly. Mix small batches until you are confident of the mixture's handling characteristics.

Mixing

Stir the two ingredients together thoroughly, at least one minute—longer in cooler temperatures *(Figure 9-5)*. To assure thorough mixing, scrape the sides and bottom of the pot as you mix. Use the flat end of the mixing stick to reach the inside corner of the pot. If you are using a power mixer, occasionally scrape the sides and corners of the mixing pot while mixing.

If you are going to be using the mixture for coating, quickly pour it into a roller pan to extend the open time.

WARNING! Curing epoxy generates heat. Do not fill or cast layers of epoxy thicker than ½"—thinner if enclosed by foam or other insulated material. Several inches of mixed epoxy in a plastic mixing cup will generate enough heat to melt the cup if left to stand for its full pot life. For this reason do not use foam or glass mixing containers. If a pot of mixed epoxy begins to exotherm (heat up), quickly move it outdoors. Avoid breathing the fumes. Do not dispose of the mixture until the reaction is complete and has cooled.

9.3.4 Adding fillers and additives

Fillers

Figure 9-6 *Epoxy can be thickened to the exact consistency needed for a particular job. The procedures in this manual refer to four common consistencies; syrup, catsup, mayonnaise and peanut butter.*

CONSISTENCY	Unthickened	Slightly thickened	Moderately thickened	Maximum thickness
	"SYRUP"	"CATSUP"	"MAYONNAISE"	"PEANUT BUTTER"
GENERAL APPEARANCE				
CHARACTERISTICS	Drips off vertical surfaces.	Sags down vertical surfaces.	Clings to vertical surfaces. Peaks fall over.	Clings to vertical surfaces. Peaks stand up.
USES	Coating, "wetting-out" before bonding, applying fiberglass, graphite and other fabrics.	Laminating/bonding flat panels with large surface areas, injecting with a syringe.	General bonding, filleting, hardware bonding.	Gap filling, filleting, fairing, bonding uneven surfaces.

After selecting an appropriate filler for your job (*Section 9.2.2*), use it to thicken the epoxy mixture to the desired consistency. The thickness of a mixture required for a particular job is controlled by the amount of filler added. There is no strict formula or measuring involved—use your eye to judge what consistency will work best. Figure 9-6 gives you a general guide to the differences between unthickened epoxy and the three consistencies referred to in this manual.

Always add fillers in a two-step process:

1. Mix the desired quantity of resin and hardener thoroughly before adding fillers. Begin with a small batch—allow room for the filler.

Figure 9-7 *Blend in small handfuls or scoops of the appropriate filler until the desired consistency is reached.*

2. Blend in small handfuls or scoops of the appropriate filler until the desired consistency is reached *(Figure 9-7)*.
   For maximum strength, add only enough filler to completely bridge gaps between surfaces without sagging or running out of the joint or gap. A small amount should squeeze out of joints when clamped. For thick mixtures, don't fill the mixing cup more than 1/3 full of epoxy before adding filler. When making fairing compounds, stir in as much 407 or 410 as you can blend in smoothly—for easy sanding, the thicker the better. Be sure all of the filler is thoroughly blended before the mixture is applied.

Additives

Additives are used to give epoxy additional physical properties when used as a coating. Although additives are blended with mixed epoxy in the same two-step process as fillers, they are not designed to thicken the epoxy. Follow the mixing instructions on the individual additive containers.

9.3.5 Removing epoxy

Removing uncured or non-curing epoxy. Removed uncured epoxy as you would spilled resin. Scrape as much material as you can from the surface using a stiff metal or plastic scraper—warm the epoxy to lower its viscosity. Clean the residue with lacquer thinner, acetone, or alcohol. Follow safety warnings on solvents and provide adequate ventilation. After recoating wood surfaces with epoxy, it's a good idea to brush the wet epoxy (in the direction of the grain) with a wire brush to improve adhesion. Allow solvents to dry before recoating.

Removing fiberglass cloth applied with epoxy. Use a heat gun to heat and soften the epoxy. Start in a small area near a corner or an edge. Apply heat until you can slip a putty knife or chisel under the cloth (about 200°F). Grab the edge with a pair of pliers and pull up on the cloth while heating just ahead of the separation. On large areas, use a utility knife to score the glass and remove in narrower strips. Resulting surface texture may be coated or remaining epoxy may be removed as follows.

Removing cured epoxy coating. Use a heat gun to soften the epoxy (200°F). Heat a small area and use a paint or cabinet scraper to remove the bulk of the coating. Sand the surface to remove the remaining material. Provide ventilation when heating epoxy.

9.4 Basic techniques

The following basic techniques are common to most repair or building projects, regardless of the type of structure or material you are working with.

9.4.1 Surface preparation

Whether you are bonding, fairing or applying fabrics, the success of the application depends not only on the strength of the epoxy, but also on how well the epoxy adheres to the surface to which it is being applied. Unless you are bonding to partially cured epoxy, the strength of the bond relies on the epoxy's ability to mechanically "key" into the surface. That is why the following three steps of surface preparation are a critical part of any secondary bonding operation.

For good adhesion, bonding surfaces should be:

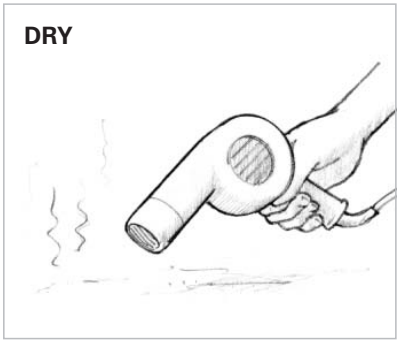

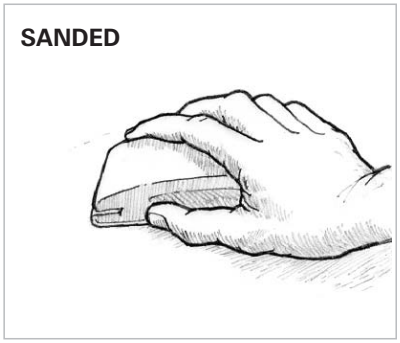

1. Clean

Bonding surfaces must be free of any contaminants such as grease, oil, wax or mold release. Clean contaminated surfaces with lacquer thinner, acetone or other appropriate solvent. Wipe the surface with paper towels before the solvent dries. Clean surfaces *before* sanding to avoid sanding the contaminant into the surface. Follow all safety precautions when working with solvents.

2. Dry

All bonding surfaces must be as dry as possible for good adhesion. If necessary, accelerate drying by warming the bonding surface with hot air guns, hair dryers or heat lamps. Use fans to move the air in confined or enclosed spaces. Watch for condensation when working outdoors or whenever the temperature of the work environment changes.

3. Sanded

Sand smooth non-porous surfaces—thoroughly abrade the surface. For most surfaces, 80-grit aluminum oxide paper will provide a good texture for the epoxy to "key" into. Be sure the surface to be bonded is solid. Remove any flaking, chalking, blistering, or old coating before sanding. Remove all dust after sanding.

Special preparation for various materials

Cured epoxy—Amine blush can appear as a wax-like film on cured epoxy surfaces. It is a by-product of the curing process and may be more noticeable in cool, moist conditions. Amine blush can clog sandpaper and inhibit subsequent bonding, but it can easily be removed. It's a good idea to assume it has formed on any cured epoxy surface.

To remove the blush, wash the surface with clean water only (not solvent) and an abrasive pad, such as Scotch-brite™ 7447 General Purpose Hand Pads. Dry the surface with paper towels to remove the dissolved blush before it dries on the surface. Sand any remaining glossy areas with 80-grit sandpaper. Wet-sanding will also remove the amine blush. If a release fabric is applied

over the surface of fresh epoxy, all amine blush will be removed when the release fabric is peeled from the cured epoxy and no additional sanding is required.

Epoxy surfaces that have not fully cured may be bonded to or coated *with epoxy* without washing or sanding. Before applying *coatings other than epoxy* (paints, bottom paints, varnishes, gelcoats, etc.), allow epoxy surfaces to cure fully, then wash and sand .

Hardwoods—Sand with 80-grit paper

Teak/oily woods—Wipe with acetone 15 minutes before coating. The solvent dries the oil at the surface and allows epoxy to penetrate. Be sure the solvent has evaporated before coating.

Porous woods—No special preparation needed. If surface is burnished, possibly by dull planer blades, sand with 80-grit paper to open pores.

Steel, lead—Remove contamination, sand or grind to bright metal, coat with epoxy then sand fresh epoxy into surface. Recoat or bond after first coat gels.

Aluminum—Sand and prepare with 860 Aluminum Etch Kit.

Polyester (fiberglass)—Clean contamination with a silicone and wax remover such as DuPont Prep-Sol™ 3919S. Sand with 80-grit paper to a dull finish.

Plastic—Adhesion varies. If a plastic is impervious to solvents such as acetone, epoxy generally will not bond to it. Soft, flexible plastics such as polyethylene, polypropylene, nylon, Plexiglas and polycarbonate fall into this category.

Hard, rigid plastics such as PVC, ABS and styrene provide better adhesion with good surface preparation and adequate bonding area. After sanding, flame oxidizing (by quickly passing propane torch over the surface without melting the plastic) can improve bonding in some plastics. It's a good idea to conduct an adhesion test on a plastic that you are uncertain about.

9.4.2 Bonding (gluing)

This section refers to two types of bonding. Two-step bonding is the preferred method for most situations because it promotes maximum epoxy penetration into the bonding surface and prevents resin-starved joints. Single-step bonding can be used when joints have minimal loads and excess absorption into porous surfaces is not a problem.

Before mixing epoxy, check all parts to be bonded for proper fit and surface preparation *(9.4.1—Surface preparation)*, gather all the clamps and tools necessary for the operation, and cover any areas that need protection from spills.

Two-step bonding

1. Wet-out bonding surfaces—Apply a straight resin/hardener mixture (without fillers) to the surfaces to be joined *(Figure 9-8)*. Wet out small or tight areas with a disposable brush. Wet out larger areas with a foam roller or by spreading the resin/hardener mixture evenly over the surface with a plastic spreader. You may proceed with step two immediately or any time before the wet-out coat becomes completely tack free.

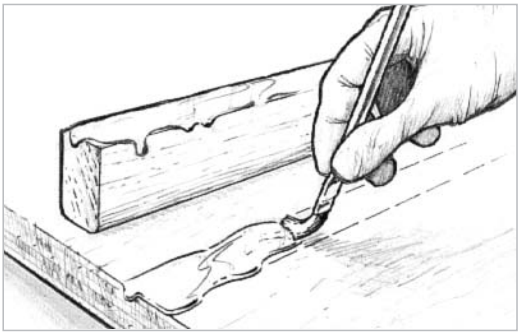

Figure 9-8 *Wet out bonding surfaces with unthickened epoxy for maximum penetration and greater adhesion.*

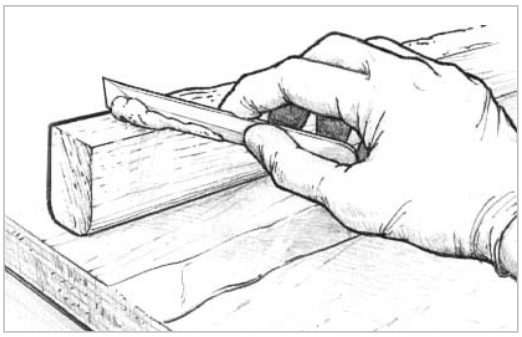

Figure 9-9 *Apply enough thickened epoxy to one of the bonding surfaces so that a small amount will squeeze out of the joint when clamped with moderate pressure.*

2. Apply thickened epoxy to one bonding surface. Modify the resin/hardener mixture by stirring in the appropriate filler until it becomes thick enough to bridge any gaps between the mating surfaces and to prevent "resin-starved" joints. Apply enough of the mixture to one of the surfaces so that a small amount will squeeze out when the surfaces are joined together with a force equivalent to a firm hand grip *(Figure 9-9)*.

   Thickened epoxy can be applied immediately over the wet-out surface or any time before the wet-out becomes completely tack free. For most small bonding operations, add the filler to the resin/hardener mixture remaining in the batch that was used for the wet-out. Mix enough resin/hardener for both steps. Add the filler quickly after the surface is wet out and allow for a shorter working life of the mixture.

3. Clamp components. Attach clamps as necessary to hold the components in place. Use just enough clamping pressure to squeeze a small amount of the epoxy mixture from the joint, indicating that the epoxy is making good contact with both mating surfaces *(Figure 9-10)*. Avoid using too much clamping pressure, which can squeeze all of the epoxy mixture out of the joint.

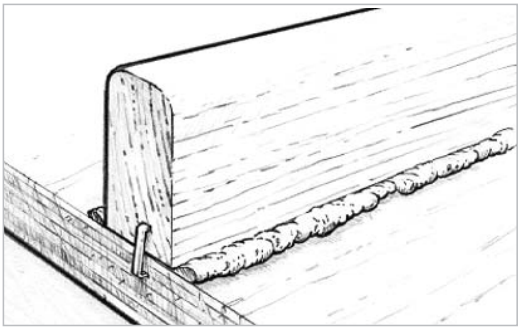

Figure 9-10 *A small amount of epoxy will squeeze out of the joint with just the right amount of thickened mixture and clamping pressure.*

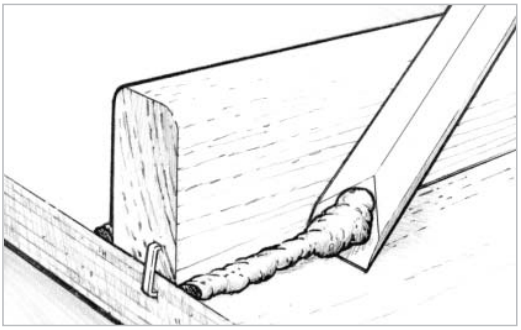

Figure 9-11 *Remove excess epoxy before it begins to gel. A sharpened mixing stick makes an excellent cleanup tool.*

4. Remove or shape excess adhesive that squeezes out of the joint as soon as the joint is secured with clamps. A wooden mixing stick with one end sanded to a chisel edge is an ideal tool for removing the excess *(Figure 9-11)*.

Single-step bonding

Single-step bonding is applying the thickened epoxy directly to the component without first wetting out with resin/hardener only. We recommend that you thicken the epoxy no more than is necessary to bridge gaps in the joint (the thinner the mixture, the more it can penetrate the surface) and that you do not use this method for highly-loaded joints or for bonding end grain or other porous surfaces.

Laminating

The term "laminating" refers to the process of bonding numbers of relatively thin sheets, like plywood, veneers, fabrics or core material to create a composite. A composite may be any number of layers of the same material or combinations of different materials. Methods of epoxy application and clamping will differ depending on what you are laminating.

Because of large surface areas and limitations of wet lay-up time, roller application is the most common method for applying epoxy. A faster method for large surfaces is to simply pour the resin/hardener mixture onto the middle of the panel and spread the mixture evenly over the surface with a plastic spreader. Apply thickened mixtures with an 809 Notched Spreader.

Using staples or screws is the most common method of clamping when you laminate a solid material to a solid substrate. An even distribution of weights will work when you are laminating a solid material to a base that will not hold staples or screws, such as a foam or honeycomb core material.

Vacuum bagging is the ideal clamping method for laminating a wide range of materials. Through the use of a vacuum pump and plastic sheeting, the atmosphere is used to apply perfectly even clamping pressure over all areas of a panel regardless of the size, shape or number of layers. *For detailed information on vacuum bagging, refer to 002-150 Vacuum Bagging Techniques.*

Clamping

Any method of clamping is suitable as long as the parts to be joined are held so that movement will not occur. Methods of clamping include spring clamps, "C" clamps and adjustable bar clamps, heavy rubber bands cut from inner tubes, nylon-reinforced packaging tape, applying weights, and vacuum bagging. When placing clamps near epoxy-covered areas, use polyethylene sheeting or peel ply under the clamps so they don't inadvertently bond to the surface. Staples, nails or drywall screws are often used where conventional clamps will not work. Any fasteners that need to be left in should be of a non-corroding alloy such as bronze. In some cases the thickened epoxy or gravity will hold parts in position without clamps.

9.4.3 Bonding with fillets

A fillet (fil'it) is a cove-shaped application of thickened epoxy that bridges an inside corner joint. It is excellent for bonding parts because it increases the surface area of the bond and serves as a structural brace. All joints that will be covered with fiberglass cloth will require a fillet to support the cloth at the inside corner of the joint.

The procedure for bonding with fillets is the same as normal bonding, except that instead of removing the squeezed-out thickened epoxy after the components are clamped in position, you shape it into a fillet. For larger fillets, add thickened mixture to the joint as soon as the bonding operation is complete, before the bonding mixture is fully cured, or any time after the final cure and sanding of exposed epoxy in the fillet area.

1. Bond parts as described in Section 9.4.2.
2. Shape and smooth the squeezed-out thick epoxy into a fillet by drawing a rounded filleting tool (mixing stick) along the joint, dragging excess material ahead of the tool and leaving a smooth cove-shaped fillet bordered on each side by a clean margin. Some excess filleting material will remain outside of the margin *(Figure 9-12)*. Use the excess material to refill any voids. Smooth the fillet until you are satisfied with its appearance. A mixing stick will leave a fillet with about a ⅜" radius. For larger fillets, an 808 Plastic Squeegee, cut to shape or bent to the desired radius, works well.

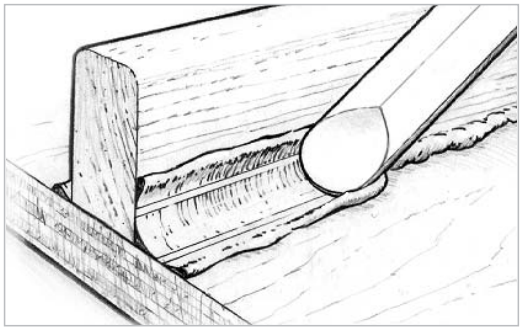

Figure 9-12 *Shape and smooth the fillet with a rounded tool.*

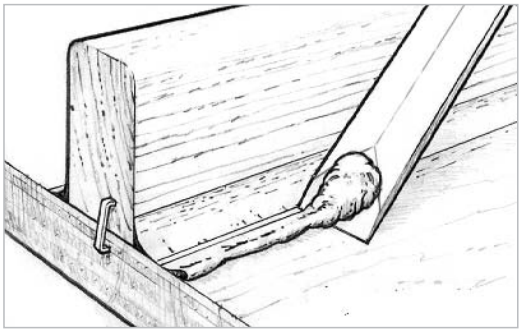

Figure 9-13 *Clean up remaining excess epoxy outside of the clean margin before it cures.*

Apply additional thickened epoxy to fill voids or make larger fillets. Apply the mixture along the joint line with the rounded mixing stick, using enough mixture to create the desired size of fillet. For longer or multiple fillets, empty caulking gun cartridges or disposable cake decorating bags can be used. Cut the plastic tip to lay a bead of thickened epoxy large enough for the desired fillet size. Heavy duty, sealable food storage bags with one corner cut off may also be used.

3. Clean up the remaining excess material outside of the margin by using a sharpened mixing stick or a putty knife *(Figure 9-13)*. Fiberglass cloth or tape may be applied over the fillet area before the fillet has cured (or after the fillet is cured and sanded).
4. Sand smooth with 80-grit sandpaper after the fillet has fully cured. Wipe the surface clean of any dust and apply several coats of resin/hardener over the entire fillet area before final finishing.

9.4.4 Fairing

Fairing refers to the filling and shaping of low areas so they blend with the surrounding surfaces and appear "fair" to the eye and touch. After major structural assembly has been completed, final fairing can be easily accomplished with WEST SYSTEM epoxy and low-density fillers.

1. Prepare the surface as you would for bonding (Section 9.4.1). Sand smooth any bumps or ridges on the surface and remove all dust from the area to be faired.
2. Wet out porous surfaces with unthickened epoxy *(Figure 9-14)*.

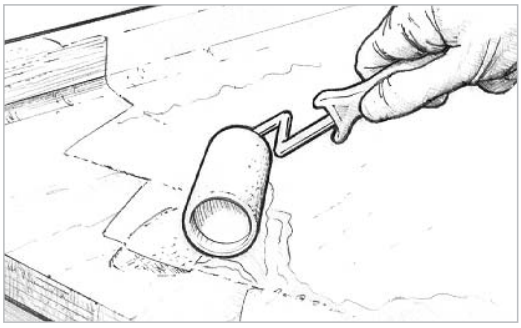

Figure 9-14 *Wet out porous surfaces before applying thickened fairing compound.*

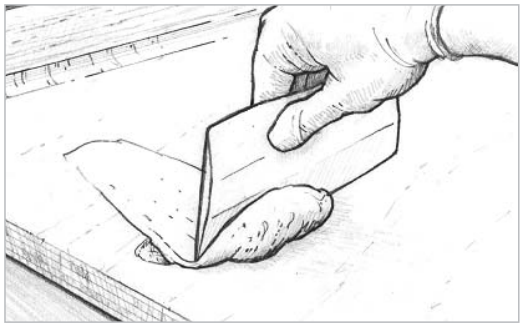

Figure 9-15 *Trowel the thickened epoxy fairing compound into the voids and depressions with a plastic spreader.*

3. Mix resin/hardener and 407 Low-Density or 410 Microlight™ filler to a peanut butter consistency.
4. Trowel on the thickened epoxy mixture with a plastic spreader, working it into all voids and depressions. Smooth the mixture to the desired shape, leaving the mixture slightly higher than the surrounding area *(Figure 9-15)*. Remove any excess thickened epoxy before it cures. If the voids you are filling are over ½" deep, apply the mixture in several applications or use 206 Slow Hardener or 209 Tropical Hardener, depending on ambient temperature.
5. Allow the final thickened epoxy application to cure thoroughly.
6. Sand the fairing material to blend with the surrounding contour *(Figure 9-16)*. Begin with 50-grit sandpaper if you have a lot of fairing material to remove. Use 80-grit paper on the appropriate sanding block when you are close to the final contour. CAUTION! Don't forget your dust mask. Remove the sanding dust and fill any remaining voids following the same procedure.

Figure 9-16 *Sand the fairing material to blend with the surrounding contour.*

7. Apply several coats of resin/hardener to the area with a disposable brush or roller after you are satisfied with the fairness. Allow the final coat to cure thoroughly before final sanding and finishing.

9.4.5 Applying woven cloth and tape

Fiberglass cloth is applied to surfaces to provide reinforcement and/or abrasion resistance, or in the case of Douglas Fir plywood, to prevent grain checking. It is usually applied after fairing and shaping are completed, and before the final coating operation. It is also applied in multiple layers (laminated) and in combination with other materials to build composite parts.

Fiberglass cloth may be applied to surfaces by either of two methods. The "dry" method refers to applying the cloth over a dry surface. The "wet" method refers to applying the cloth to an epoxy-coated surface often after the wet-out coat becomes tacky, which helps it cling to vertical or overhead surfaces. Since this method makes it more difficult to position the cloth, the dry method is the preferred method especially with thinner cloth.

Dry method

1. Prepare the surface as you would for bonding (Section 9.4.1).
2. Position the cloth over the surface and cut it several inches larger on all sides. If the surface area you are covering is larger than the cloth size, allow multiple pieces to overlap by approximately two inches. On sloped or vertical surfaces, hold the cloth in place with masking or duct tape, or with staples.
3. Mix a small quantity of epoxy (three or four pumps each of resin and hardener).
4. Pour a small pool of resin/hardener near the center of the cloth.
5. Spread the epoxy over the cloth surface with a plastic spreader, working the epoxy gently from the pool into the dry areas *(Figure 9-17)*. Use a foam roller or brush to wet out fabric on vertical surfaces. Properly wet out fabric is transparent. White areas indicate dry fabric. If you are applying the cloth over a porous surface, be sure to leave enough epoxy to be absorbed by both the cloth and the surface below it. Try to limit the amount of squeegeeing you do. The more you "work" the wet surface, the more minute air bubbles are placed in suspension in the epoxy. This is especially important if you plan to use a clear finish (see below). You may use a roller or brush to apply epoxy to horizontal as well as vertical surfaces.
   Smooth wrinkles and position the cloth as you work your way to the edges. Check for dry areas (especially over porous surfaces) and re-wet them as necessary before proceeding to the next step. If you have to cut a pleat or notch in the cloth to lay it flat on a compound curve or corner, make the cut with a pair of sharp scissors and overlap the edges for now.

   Note: For clear wood finishes, an alternative wet out method is to lay the epoxy onto the fabric with a short-bristled brush. Dip the brush in the epoxy and lay the epoxy on the surface in a light even stroke. Don't force the epoxy into the cloth, which may trap air in the fabric and show through the clear finish. Apply enough epoxy to saturate the fabric and the wood below. After several minutes, lay on additional epoxy to dry (white) areas.

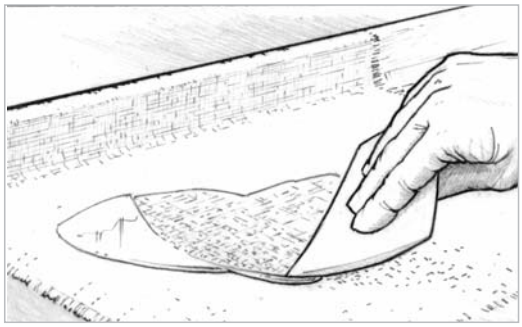

Figure 9-17 *Spread the epoxy from the center of the fabric toward the edges with a plastic spreader.*

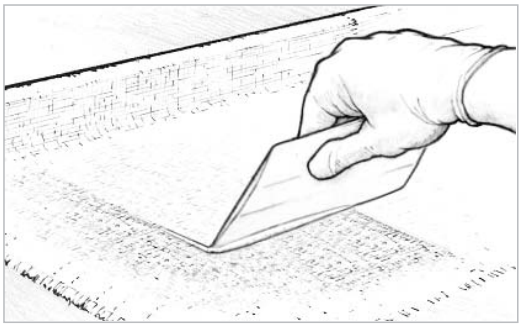

Figure 9-18 *Squeegee away excess epoxy before the first batch begins to gel.*

7. Squeegee away excess epoxy before the first batch begins to gel *(Figure 9-18)*. Drag the spreader over the fabric, using even-pressured, overlapping strokes. Use enough pressure to remove excess epoxy that would allow the cloth to float off the surface, but not enough pressure to create dry spots. Excess epoxy appears as a shiny area, while a properly wet-out surface appears evenly transparent, with a smooth, cloth texture. Later coats of epoxy will fill the weave of the cloth.

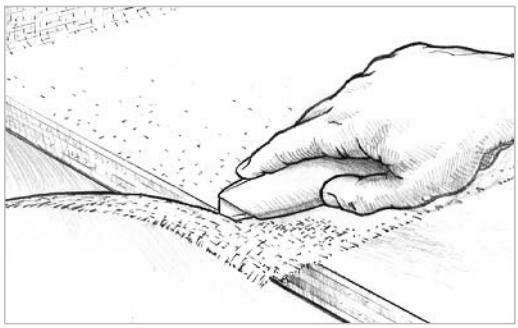

Figure 9-19 *Trim excess cloth after the epoxy has begun to gel using a sharp utility knife.*

8. Trim the excess and overlapped cloth after the epoxy has begun to gel, using a *sharp* utility knife *(Figure 9-19)*. Trim overlapped cloth, if desired, as follows:
a) Place a metal straightedge on top of and midway between the two overlapped edges. **b)** Cut through both layers of cloth with a sharp utility knife *(Figure 9-20)*.

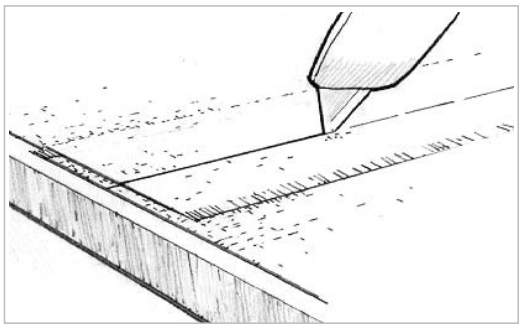

Figure 9-20 *Trim overlapping fabric using a metal straightedge and a sharp utility knife, for a flush butt joint.*

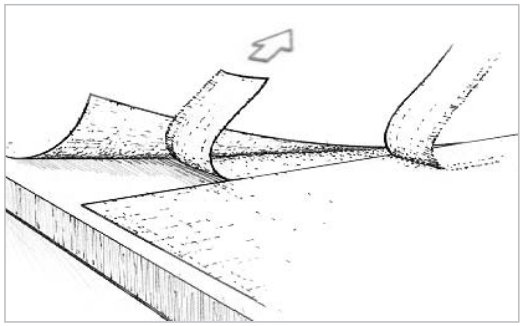

Figure 9-21 *Remove the topmost trimming. Then lift the opposite cut edge to remove the overlapped trimming.*

c) Remove the topmost trimming and then lift the opposite cut edge to remove the overlapped trimming *(Figure 9-21)*. **d)** Re-wet the underside of the raised edge with epoxy and smooth into place.

The result should be a near perfect butt joint, eliminating double cloth thickness. A lapped joint is stronger than a butt joint, so if appearance is not important, you may want to leave the overlap and fair in the unevenness after coating.

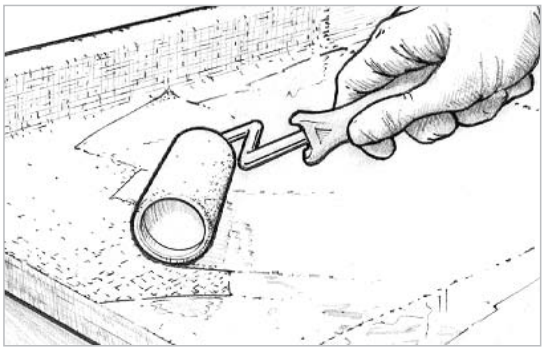

Figure 9-22 *Apply the first coat of unthickened epoxy to fill the weave of the cloth before the wet-out coat becomes completely tack free.*

9. Coat the surface to fill the weave before the wet-out becomes completely tack free *(Figure 9-22)*. Follow the procedures for epoxy barrier coating under Section 9.4.6. It will take two or three coats to completely fill the weave of the cloth and to allow for a final sanding that will not affect the cloth.

Wet method

An alternative is to apply the fabric or tape to a surface coated with wet epoxy. As mentioned, this is not the preferred method, especially with large pieces of cloth, because of the difficulty removing wrinkles or adjusting the position of the cloth as it is being wet out. However, you may come across situations when this method may be useful or necessary.

1. Prepare the surface (Section 9.4.1).
2. Pre-fit and trim the cloth to size. Roll the cloth neatly so that it may be conveniently rolled back into position later.
3. Roll a heavy coat of epoxy on the surface.
4. Unroll the glass cloth over the wet epoxy and position it. Surface tension will hold most cloth in position. If you are applying the cloth vertically or overhead, you may want to wait until the epoxy becomes tacky. Work out wrinkles by lifting the edge of the cloth and smoothing from the center with your gloved hand or a spreader.
5. Apply a second coat of epoxy with a foam roller. Apply enough epoxy to thoroughly wet out the cloth.
6. Remove the excess epoxy with a spreader, using long overlapping strokes. The cloth should appear consistently transparent with a smooth cloth texture.
7. Follow steps 7, 8 and 9 under the dry method to finish the procedure.
   Any remaining irregularities or transitions between cloth and substrate can be faired by using an epoxy/filler fairing compound if the surface is to be painted. Any additional fairing done after the final coating should receive several additional coats over the faired area.

   Note: A third alternative, a variation of both methods, is to apply the fabric after a wet out coat has reached an initial cure. Follow the first three steps of the Wet Method, but wait until the epoxy cures dry to the touch before positioning the fabric and continuing with Step 3 of the Dry Method. Apply the fabric before the first coat reaches its final cure phase.

9.4.6 Epoxy barrier coating

The object of final coating is to build up an epoxy coating that provides an effective moisture barrier and a smooth base for final finishing.

Apply a minimum of two coats of WEST SYSTEM epoxy for an effective moisture barrier. Apply three coats if sanding is to be done. Moisture protection will increase with additional coats, up to six coats or about a 20 mil thickness. Additives or pigments should not be added to the first coat. Mixing thinners with WEST SYSTEM epoxy is not recommended.

Disposable, thin urethane foam rollers, such as WEST SYSTEM 800 Roller Covers, allow you greater control over film thickness, are less likely to cause the epoxy to exotherm and leave less stipple than thicker roller covers. Cut the covers into narrower widths to reach difficult areas or for long narrow surfaces like stringers.

Complete all fairing and cloth application before beginning the final coating. Allow the temperature of porous surfaces to stabilize before coating. Otherwise, as the material warms up, air within the porous material may expand and pass from the material (outgassing) through the coating and leave bubbles in the cured coating.

1. Prepare the surface as necessary (Section 9.4.1).
2. Mix only as much resin/hardener as you can apply during the open time of the mixture. Pour the mixture into a roller pan as soon as it is mixed thoroughly.

3. Load the roller with a moderate amount of the epoxy mixture. Roll the excess out on the ramp part of the roller pan to get a uniform coating on the roller.
4. Roll lightly and randomly over an area approximately 2' × 2' to transfer the epoxy evenly over the area *(Figure 9-23)*.
5. As the roller dries out, increase pressure enough to spread the epoxy into a thin, even film. Increase the coverage area, if necessary, to spread the film more thinly and evenly. **The thinner the film, the easier it is to keep it even and avoid runs or sags in each coat.**
6. Finish the area with long, light, even strokes to reduce roller marks. Overlap the previously coated area to blend both areas together.
7. Coat as many of these small working areas as you can with each batch. If a batch begins to thicken before it can be applied, discard it and mix a fresh, smaller batch.

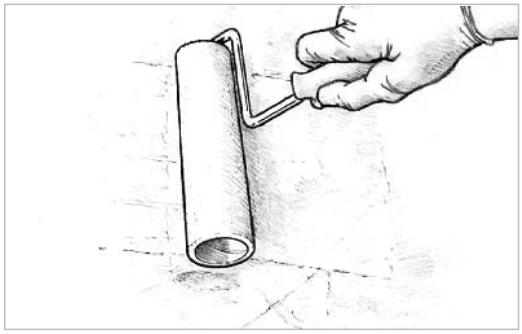

Figure 9-23 *Apply the epoxy in thin even coats using a thin foam roller.*

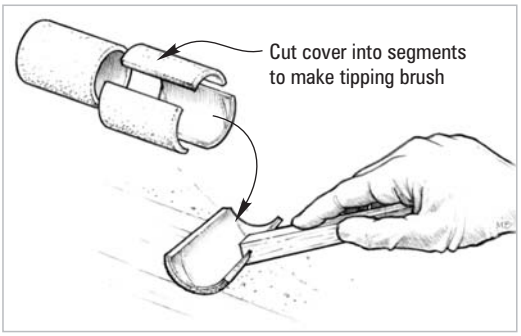

Figure 9-24 *Tip off the fresh coat of epoxy with the grain, using a foam roller brush to remove bubbles and roller marks.*

8. Drag a foam roller brush lightly over the fresh epoxy in long, even, overlapping strokes after each full batch is applied. Use enough pressure to smooth the stipple, but not enough to remove any of the coating *(Figure 9-24)*. Alternate the direction in which each coat is tipped off, 1st coat vertical, 2nd coat horizontal, 3rd coat vertical, etc. A WEST SYSTEM 800 Roller Cover can be cut into segments to make a tipping bush.

Recoating Apply second and subsequent coats of epoxy following the same procedures. Make sure the previous coat has cured firmly enough to support the weight of the next coat. To avoid sanding between coats, apply additional coats before the previous coat has become completely tack free and apply all of the coats in the same day. *See Special preparation—Cured epoxy in Section 9.4.1.* After the final coat has cured overnight, wash and sand it to prepare for the final finish.

9.4.7 Final surface preparation

Proper finishing techniques will not only add beauty to your efforts, but will also protect your work from ultraviolet light which will break down the epoxy over time. The most common methods of finishing are painting or varnishing. These coating systems protect the epoxy from ultraviolet light and require proper preparation of the surface before application.

Preparation for the final finish is just as important as it is for recoating with epoxy. The surface must first be clean, dry and sanded (Section 9.4.1).

1. Allow the final epoxy coat to cure thoroughly.
2. Wash the surface with a Scotch-brite™ pad and water. Dry with paper towels
3. Sand to a smooth finish. If there are runs or sags, begin sanding with 80-grit paper to remove the highest areas. Sand until the surface feels and looks fair. Complete sanding with the appropriate grit for the type of coating to be applied. Generally, the thinner the coating, the finer the grit. Paint adhesion relies on the mechanical grip of the paint keying into the sanding scratches in the epoxy's surface. If a high-build or filling primer is to be applied, 80–100-grit is usually suffi-

cient. For primers and high-solids coatings, 120–180-grit may be adequate. Finishing with 220–400-grit paper is often recommended for coatings with high-gloss finishes. Grits finer than this may not provide enough tooth for good adhesion. Follow the coating manufacturer's recommendation for surface preparation. Wet sanding is preferred by many people because it reduces sanding dust and it will allow you to skip Step 2. Wet sanding is often used for final sanding after an initial machine sanding with a coarse grit.

4. After you are satisfied with the texture and fairness of the surface, rinse the surface with fresh water. Rinse water should sheet evenly without beading or fish-eyeing. If rinse water beads up (a sign of contamination), wipe the area with solvent and dry with a paper towel, then wet sand again until beading is eliminated.

Proceed with your final coating after the surface has dried thoroughly. To reduce the possibility of contamination, it is a good idea to begin coating within 24 hours of the final sanding. Follow all of the instructions from the coating system's manufacturer. It may be a good idea to make a test panel to evaluate the degree of surface preparation required and the compatibility of the finish system. ■

Appendix A

Estimating guides for WEST SYSTEM® products

Group size quantities and coating coverage

WEST SYSTEM epoxy resin and hardeners are packaged in three "Group Sizes." For each container size of resin, there is a corresponding sized container of hardener and a corresponding mini pump size. When purchasing resin, hardener and mini pumps, be sure all containers are labeled with the same Group Size letter (A, B or C).

Group Size	Resin quantity	Hardener quantity	Mixed quantity	Saturation Coat Porous Surfaces	Build-up Coats Non-Porous Surfaces
A	105-A 1 qt (.94 L)	205-A or 206-A .43 pt (.20 L)	1.2 qt. (1.15 L)	90–105 sq. ft. (8.5–10m²)	120–135 sq. ft. (11–12.5 m²)
		207-A or 209-A .66 pt (.31 L)	1.3 qt. (1.26 L)	90–105 sq. ft. (9–10 m²)	120–135 sq. ft. 11–13 m²)
B	105-B .98 gal (3.74 L)	205-B or 206-B .86 qt (.81 L)	1.2 gal. (4.55 L)	350–405 sq. ft. (32–37 m²)	462–520 sq. ft. (43–48 m²)
		207-B or 209-B 1.32 qt (1.24 L)	1.3 gal. (4.98 L)	370–430 sq. ft. (35–40 m²)	490–550 sq. ft. (45–50 m²)
C	105-C 4.35 gal (16.47 L)	205-C or 206-C .94 gal (3.58 L)	5.29 gal. (20 L)	1530–1785 sq. ft. (142–165 m²)	2040–2300 sq. ft. (190–213 m²)
		207-C or 209-C 1.45 gal (5.49 L)	5.8 gal. (21.9 L)	1675–1955 sq. ft. (155–180 m²)	2235–2520 sq. ft. (207–233 m²)

Fiberglass thickness per layer

Product number	740	742	729	745	737	738
Fabric weight	4 oz.	6 oz.	9 oz.	12 oz.	15 oz.	22 oz.
Single layer thickness*	.008"	.010"	.017"	.020"	.033"	.040"

*Average of multiple layers applied by hand lay-up

Filler/epoxy proportion guide

Approximate mixed epoxy required to produce a catsup, mayonnaise or peanut butter consistency for the various sized filler products at 72°F. Mixtures will be thinner at higher temperatures.

Filler	Package size	Quantity of mixed epoxy required for		
		"Catsup" consistency	"Mayonnaise" consistency	"Peanut butter" consistency
403-9	6.0 oz	3.8 qt	2.5 qt	1.0 qt
403-28	20.0 oz	3.2 gal	2.0 gal	.9 gal
403-B	20.0 lb	48.0 gal	32.0 gal	15.3 gal
404-15	15.2 oz	1.2 qt	.9 qt	.7 qt
404-45	45.6 oz	3.6 qt	2.8 qt	2.0 qt
404-B	30.0 lb	9.4 gal	7.4 gal	5.3 gal
405	8.0 oz	.9 qt	.7 qt	.6 qt
406-2	1.9 oz	1.3 qt	.9 qt	.5 qt
406-7	6.0 oz	1.1 gal	3.0 qt	1.7 qt
406-B	10.0 lb	27.0 gal	16.0 gal	6.0 gal
407-5	4.0 oz	.5 qt	.4 qt	.3 qt
407-15	12.0 oz	1.7 qt	1.3 qt	1.0 qt
407-B	14.0 lb	6.0 gal	4.8 gal	3.7 gal
410-2	2.0 oz	1.2 qt	.9 qt	.7 qt
410-7	5.0 oz	3.0 qt	2.4 qt	1.8 qt
410-B	4.0 lb	8.9 gal	7.2 gal	5.6 gal

Shelf life

If the containers are kept sealed when not in use WEST SYSTEM resin and hardeners should remain usable for many years. Over time, 105 Resin will thicken slightly and will therefore require extra care when mixing. Hardeners may darken with age, but physical properties are not affected by color. Mini Pumps may be left in containers during storage. It is a good idea, after a long storage to verify the metering accuracy of the pumps and mix a test batch to assure proper curing before applying epoxy to your project.

Appendix B

Tools

Most fiberglass repair procedures can be completed with a small inventory of common or readily available hand and power tools. The tools listed here are specially suited for repair procedures in this manual or for working with epoxy.

Grinders

Grinding to remove damaged laminate and preparing an area for bonding is a key step in many of the procedures throughout this manual. The proper grinder can make a big difference in the quality and efficiency of these operations.

We recommend using a 7" polisher (about 2000 RPM), with an 8" diameter, ½" thick foam sanding pad attached.

Use 36-50 grit paper, either self adhesive or attached with feathering disc adhesive, for quick removal or general shaping. Use 80 grit for finer shaping and smoothing.

Fairing boards

A long flexible sanding block is the primary tool for overall fairing. Working on the same principle as a batten, it will bend to the overall shape of the surface, bridging the low areas and knocking down the high spots. A long fairing block can be made of ¼" to ½" plywood, depending on the curve of the surface to be faired. The length of the block is a multiple of 11" to make economical use of a 9" x 11" sheet of sandpaper. The width of the block is 4½" or half a sheet. The sandpaper is applied to the block with feathering disc adhesive. Handles may be bonded to the ends of the block for greater control

Roller cover brushes

Gelcoat Sprayers

For small areas of gelcoat or paint finishing, as described in Section 2.2, the Preval® Auto Sprayer is a handy, self-contained, reusable sprayer. Holds up to 16 oz. of custom mixed paints or gelcoats. It can be purchased at automotive paint supply stores. Precision Valve Corporation, Yonkers, NY 10703

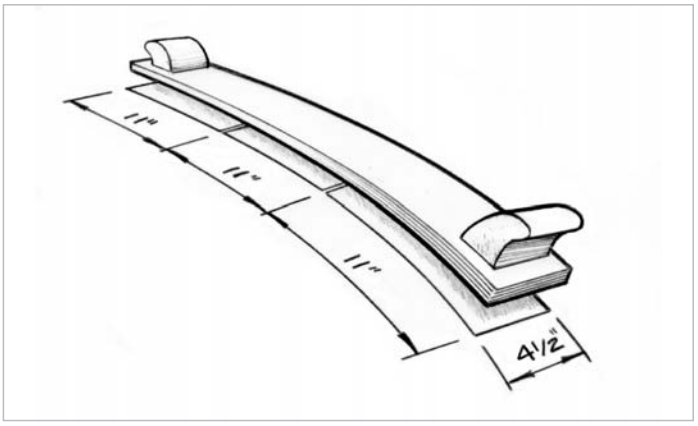

Roller cover brushes are made by cutting WEST SYSTEM 800 Roller covers into segments. They are used to "tip off" coats of epoxy to remove bubbles and roller marks. Drag the brush over fresh epoxy in long, even, overlapping strokes after each batch is applied. Use enough pressure to smooth the surface without removing epoxy.

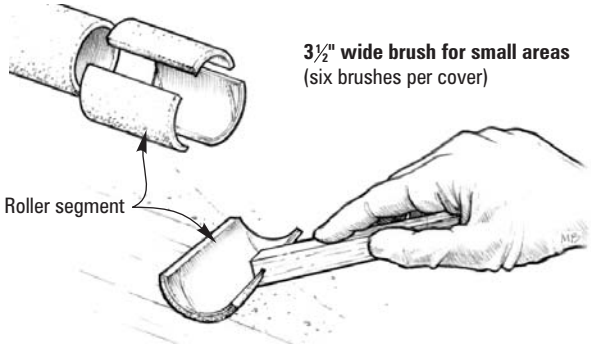

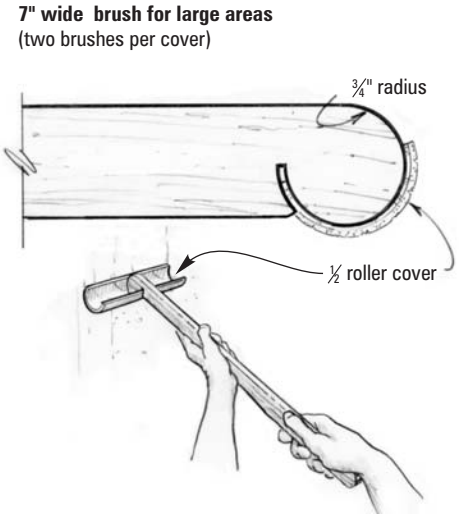

A

Appendix C

Cold Temperature Bonding and Coating Techniques

Epoxy can be used under cold weather conditions, but you must use special application techniques. These precautions are not elaborate or difficult, but they are necessary to achieve acceptable long-term epoxy performance. These precautions do not apply to WEST SYSTEM epoxy alone; any epoxy used in critical marine structural situations may have its capabilities and performance affected by cold weather. In fact, due to differences in formulation, not all epoxies possess the necessary characteristics to ever cure well under cold weather conditions.

Chemical characteristics

When you mix an epoxy resin and hardener together, you start a chemical reaction which, as a byproduct, produces heat. This is called an exothermic reaction. The ambient temperature in which an epoxy chemical reaction takes place affects the rate of reaction. Warmer temperatures accelerate the reaction time, while cooler temperatures retard it.

Duration of reaction, among other variables, influences inter-bonding of the epoxy molecules. If the reaction is too slow, even though the epoxy may harden, it may not cure completely and possibly never achieve its designed physical properties. This is where danger lies, for improperly cured epoxy may possess enough strength to hold a structure together, yet it may fail after repeated loadings during normal operation.

Working properties

Temperature has a profound effect on the working properties of uncured epoxy. Ambient temperature changes will drastically change the epoxy's viscosity (thickness). Viscosity of water varies little with temperature changes until it either boils or freezes. Epoxy, however, is made of heavier molecules and temperature can have an effect that is 10 times greater on epoxy molecules than on water molecules over a temperature change of 30°F (16°C).

The colder it gets, the thicker the epoxy becomes, reducing its ability to flow out. This kind of change has three important consequences for working with epoxy under cold conditions.

First, it is more difficult to mix the resin and hardener thoroughly: the resin flows through the dispensing pumps and out of containers with greater difficulty, the cold epoxy and hardener are prone to clinging to the surfaces of the pumps, containers and mixing tools; and they resist being completely blended unless mixed very thoroughly. Remember, because of the low temperature, the chemical reaction isn't going off as well either. Compounding a less efficient exothermic reaction with potential for incomplete and/or inaccurate mixing, you have the recipe for a permanently deficient bond.

Second, the mixed epoxy is much harder to apply. If you've ever tried to spoon honey right out of the refrigerator instead of at room temperature, you know just what we're referring to: the chilled mixture has become stiff. When cold temperatures make epoxy stiff, it's extremely difficult to coat and wet out surfaces.

Third, air bubbles may be introduced when mixing and held in suspension due to the chilled epoxy's increased surface tension. This can be especially troublesome in clear-finish applications.

Cold weather techniques

Up to this point, we've told you all of the reasons why cold weather epoxy usage is difficult and potentially dangerous. However, with a little advance planning and certain simple precautions, all of these problems can be addressed and their consequences avoided. The following are six basic cold weather rules. We've used these guidelines for over 20 years and have yet to experience a cold weather curing problem with WEST SYSTEM epoxy.

1 **Use WEST SYSTEM 205 Fast Hardener.**
WEST SYSTEM 205 Hardener has been designed with a chemically-activated polyamine system which exhibits a good cure as low as 35°F (1.5°C). It exhibits a faster cure characteristic than 206 Slow Hardener and offers less uncured exposure time which reduces the chances of incomplete cure due to cold temperatures.

2 **Dispense resin and hardener in the proper mixing ratio.**
All epoxies have been formulated for a specific mixing ratio of resin to hardener. It is important to mix your epoxy in the precise ratio recommended by the manufacturer. Increasing the amount of hardener will not accelerate cure, but it will seriously compromise the epoxy's ultimate strength. WEST SYSTEM Mini Pumps are designed and calibrated to dispense the correct ratio with one pump stroke of resin for every one pump stroke of hardener.

3 **Warm resin and hardener before using.**
As we discussed above, the warmer the resin and hardener, the lower the viscosity. Thinner resin and hardener will flow through mechanical pumps better, cling less to containers and mixing equipment, and exhibit superior handling and wet-out characteristics. The epoxy can be warmed using heat lamps or can simply be kept in a warm area until you are ready to use it. Another simple method of warming the resin and hardener is to construct a small hot box out of rigid sheets of foil-backed insulation. Place a regular light bulb or an electric heating pad inside to maintain a temperature of no greater than 90°F (32°C).

4 **Stir the resin and hardener thoroughly.**
Use extra care when mixing the resin and hardener, and mix for longer than normal periods of time. Scrape the sides and bottom of the mixing container, using a flat-ended mixing stick to reach the corners. Using a smaller diameter mixing pot will also improve the chemical activity because the limited surface area will not dissipate heat produced by the reaction.

5 **Warm working surfaces.**
Applying warmed epoxy to a cold structure will quickly retard the molecular bonding activity of the epoxy. Be certain the structure, as well as the area surrounding the structure, is brought up to temperature. A hull, for example, which is colder than the surrounding air may experience condensation and result in water contamination to epoxy applied on it. Warm the structure as much as possible. This can be done by constructing tents around small areas and heating with portable heaters or warming the area with hot air guns or heat lamps. Small components or materials (such as fiberglass cloth) can be warmed before use in a hot box as described above.

6 **Prepare surfaces carefully between applications.**
When coating under cold conditions, a thin film of epoxy often dissipates any exothermic heat generated by the reaction. When heat is dissipated quickly, the epoxy may not cure for an extended period of time. Some reaction with water may occur, resulting in the formation of an amine blush on the surface. Immediately prior to applying subsequent coatings, wash the surface with clean water and allow it to dry thoroughly.

Cold weather storage

It is best to store WEST SYSTEM materials above 35°F (1.5°C) with the container caps screwed down tightly. Storing epoxy in extreme cold may cause crystallization. The formation of crystals does not compromise the epoxy and they can be remedied. Boil water in a pot large enough to hold your epoxy containers. Remove each container's lid to avoid pressure build-up, which may cause the cans to burst, and place the cans in the hot water. Continually stir the epoxy with a clean stick until the liquid regains clarity and all crystals have melted. Remove from the water, replace the lids tightly and invert the container to melt any crystals which may be clinging to the top of the container. If the resin pump has crystallized, pumping warm resin through it should dissolve the crystals. ■

Appendix D

Problem solving guide

This guide is designed to help identify and prevent potential problems associated with epoxy use. If the prevention steps described here do not resolve the problem, call the West System technical staff.

PROBLEM	POSSIBLE CAUSES	PREVENTION
The epoxy mixture has not cured after the recommended cure time has passed.	Off ratio—too much or too little hardener will affect the cure time and thoroughness of the cure	1. Remove epoxy. Do not apply additional material over non-curing epoxy. See 9.3.5 Removing epoxy. 2. Check correct number of pump strokes-use equal strokes of resin and hardener. DO NOT add extra hardener for faster cure! 3. Check for correct pump (5:1 or 3:1 ratio). 4. Check pump ratio. Be sure pumps are operating and metering resin and hardener properly (see pump instructions).
	Low temperature- Epoxy mixtures cure slower at low temperatures	1. Allow extra curing time in cool weather. 2. Apply heat to maintain the chemical reaction and speed the cure. 3. Use a faster hardener, designed to cure at lower temperatures. See 9.3.2 Understanding and controlling cure time.
	Insufficient mixing	1. Remove epoxy. Do not apply additional material over non-curing epoxy. See 9.3.5 Removing epoxy. 2. Mix resin and hardener together thoroughly to avoid resin rich and hardener rich areas. 3. Add fillers or additives *after* resin and hardener have been thoroughly mixed. See 9.3.3 Dispensing and mixing.
	Incorrect products	1. Remove epoxy. Do not apply additional material over non-curing epoxy. See 9.3.5 Removing epoxy. 2. Check for proper resin and hardener. Resin will not cure properly with other brands of hardener or with polyester catalysts.
Bond failure	Insufficient cure	See above.
	Resin starved joint-epoxy has wicked into porous bonding surfaces	Wet out bonding surfaces before applying thickened epoxy. Re-wet very porous surfaces and end grain. See 9.4.2 Bonding—Two-step bonding.
	Contaminated bonding surface	Clean and sand the surface following the procedure in 9.4.1 Surface preparation. Sand wood surfaces after planing or joining.
	Bonding area too small for the load on the joint	Increase bonding area by adding fillets, bonded fasteners or scarf joints.
	Too much clamping pressure squeezed epoxy out of the joint	Use just enough clamping pressure to squeeze a small amount of epoxy from the joint.
Clear coating turned cloudy	Moisture from condensation or very humid conditions reacts with amines in uncured hardener	1. Apply moderate heat to partially cured coating to remove moisture and complete the cure. Avoid overheating. 2. Use 207 Hardener for clear coating applications and for bonding thin veneers that may bleed through to the surface.
	Entrapped air from aggressive roller application	1. Apply moderate heat to partially cured coating to release trapped air and complete the cure. Avoid overheating. 1. Apply coating at warmer temperature–epoxy is thinner at warmer temperatures. 2. Apply epoxy in thin coats.
Waxy film appears on surface of cured epoxy	Amine blush forms as a result of the curing process	Blush formation is typical. Remove with water. See 9.4.1 Special preparation for various materials—Cured epoxy.
The hardener has turned red after long storage	Moisture in contact with hardener and metal container	Red color will not affect epoxy performance. Avoid using for coating or exposed areas where color is not desired.

PROBLEM	POSSIBLE CAUSES	PREVENTION
Runs or sags in coating	Epoxy applied too thick	1. Use 800 Roller Covers and roll the coating out into a thinner film. A thin film will flow out much smoother than a thicker film after it is tipped off with the foam roller brush. 2. Warm the epoxy to thin it or apply the coating at a warmer temperature. See 9.4.6 Barrier coating.
	Coating curing too slowly	1. Apply the coating at a warmer temperature. 2. Warm the resin and hardener before mixing to speed the cure in cool weather. 3. Switch to a faster hardener if possible. See 9.3.2 Understanding and controlling cure time.
Fairing compound (epoxy/407 or 410 mixture) sags and is difficult to sand	Fairing material not thick enough	1. Add more filler to the mixture until it reaches a "peanut butter" consistency–the more filler added, the stiffer and easier it will be to sand. 2. Allow the wet-out coat to gel before applying the fairing material to vertical surfaces. See 9.4.4 Fairing.
Paint or varnish will not set up over epoxy	Epoxy not completely cured	Allow the final epoxy coat to cure thoroughly. Allow several days if necessary for slow hardeners at cooler temperatures. Apply moderate heat to complete the cure if necessary. See 9.3.2 Understanding and controlling cure time.
	Paint incompatible with epoxy	1. Use a different type of paint. Some paints and varnishes may be incompatible with some hardeners. If unsure, test for compatibility on a coated piece of scrap material. 2. Use 207 Hardener. It is compatible with most paints and varnishes.
	Epoxy surface not thoroughly prepared	Remove the amine blush and sand the surface thoroughly before applying paints or varnishes. See 9.4.7 Final surface preparation.
Epoxy became very hot and cured too quickly	Batch too large	1. Mix smaller batches. 2. Transfer the mixture to a container with more surface area, immediately after mixing. See Understanding cure time
	Temperature too warm for the hardener	Use 206 Slow or 209 Extra Slow Hardener in very warm weather.
	Application too thick	Apply thick areas of fill in several thin layers.
Bubbles formed in coating over porous surface (bare wood or foam)	Air trapped in pores escapes through coating (outgassing) as the materials temperature is rising	1. Coat the surface as the material's temperature is dropping—after warming with heaters or during the later part of the day. 2. Apply a thinner coat, allowing air to escape easier. 3. Tip off the coating with a roller cover brush to break bubbles.
Pinholes appear in epoxy coating over abraded fiberglass or epoxy	Surface tension causes epoxy film to pull away from pinhole before it gels	After applying epoxy with an 800 Roller Cover, force epoxy into pinholes with a stiff plastic or metal spreader held at a low or nearly flat angle. Recoat and tip off after all pinholes are filled.
Fish-eyeing in coating	Contamination of the coating or surface, or improper abrasion or the undercoating	1. Be sure mixing equipment is clean. Avoid waxed mixing containers. 2. Be sure surface is properly prepared. Use proper grit sandpaper for the coating, e.g., 80-grit for epoxy. See paint or varnish manufacturer's instructions for proper surface preparation. After surface is prepared, avoid contamination—fingerprints, exhaust fumes, rags with fabric softener (silicone). Coat within hours of preparation. After wet sanding, rinse water should sheet without beading (beading indicates contamination). Wipe with appropriate solvent and re-rinse until water no longer beads. Contact the West System technical staff if you have additional questions.

Index

A
abrasion, 6
active core, 10
additives, 63, 68
adhesive fillers, 63
aluminum, bonding to, 70

B
backing support, 23
barrier coating, 76
bevel, 13
bonding,
  basic technique, 70
  fasteners, 48
  hardware, 49
  preparation, 69
  to metal, 49
  with fillets, 72
bottom paint, 9

C
cabin sole, 10
casting epoxy base, 52
chopped-strand mat, 1
clamping, 72
cleanup, 62
cockpit sole, 10
cold temperature bonding, 81
construction methods, 2
controlling cure time, 66
cores
  in construction, 2
  panel damage, 28
  replacing stringer, 12
  stringer damage, 11
coverage, coating, 79
cracking, 5
cure stages, 64

D
deck
  repair, 42
  teak installation, 44
delamination
  skin/core, 28
  sole and deck, 42
  transom, 33
dispensing epoxy, 66
disposal, epoxy, 62
dry method, applying fabric, 74

E
estimating guides, 79
epoxy product description, 62

F
fairing
  filler description, 64
  technique, 73
fastener bonding, 47
fiberglass
  applying over stringers, 14
  in construction, 1
  reinforcing with, 16
  skin repair, 21
fillers
  proportions, 79
  description, 63
fillets, 72
final cure phase, 65
finishing, 7
floors, 10
foam cores, 19

G
gelcoat blisters, 3
gelcoat finish, 7
graphite bearing, 60

H
half-round cores, 19
hardeners, 62
hardware
  bonding, 47
  installing, 47
hazards, 61
holed panels, 39
hydrolysis, 3

I
inactive core, 11
initial cure phase, 64

K
keels
  external ballast, 56
  internal ballast, 55
  templating, 57

L
laminated stringers, 18
lead keel, 56

M
mat, chopped strand, 1
mini pumps, using, 66
mixing epoxy, 67

O
open time, 64

P
paint finish, 9
planks, teak, 46
plastic, bonding to, 70
plywood
  sole/deck repair, 42
  transom core, 33
polyester, 1
polyurethane paint, 9
preparation for bonding, 69
problem solving, 83

R
recoating, 77
reinforcing, 16
reinforcing flexible panels, 16
removable fasteners, 54
removing bonded fasteners, 54
removing epoxy, 68
repair patch, 25
resin, 62
rot
  panel core, 31
  stringer core, 11
roving, woven, 1
rudder bearings, 59

S
safety, 61
screw fasteners, 51
secondary bonding, 4
shelf life, 79
skin
  delamination, 28
  repair, 21
skin, fiberglass, 21
sole, cockpit/cabin, 42
standard techniques, 61–78
stiffness, improving, 10
stringer
  adding, 18
  repair, 10
  replacing, 13
surface preparation
  for epoxy, 69
  for finish coating, 77

T
tabbing, 10, 43
teak deck, installing, 44
templating foils, 57
terminology, 3
through-bolted fasteners, 49
transom
  core replacement, 34
  skin remove/replacement, 33

U
unidirectional fiber, using, 20

V
vacuum bagging, 26
veneers, teak, 44

W
wet method, applying fabric, 76
woven roving, 2

Additional building and repair information available from West System Inc.

Publications

002-950 **West System® User Manual & Product Guide**
The primary guide to safety, handling and the basic techniques of epoxy use. Includes a complete description of West System epoxy resin, hardeners, fillers, additives, reinforcing materials, tools, supplies and publications.

002 **The Gougeon Brothers on Boat Construction** 5th Edition
This book is a must for anyone building a boat or working with wood and West System epoxy. Includes extensive chapters on composite construction techniques, materials, lofting, safety and tools, with many illustrations, diagrams and photographs.

002-970 **Wooden Boat Restoration & Repair**
An illustrated guide to restore the structure, improve the appearance, reduce the maintenance and prolong the life of wooden boats with West System epoxy. Includes information on dry rot repair, structural framework repair, hull and deck planking repair, hardware installation with epoxy and protective coating.

002-650 **Gelcoat Blisters-Diagnosis, Repair & Prevention**
A guide for repairing and preventing gelcoat blisters in fiberglass boats with West System epoxy. Includes an analysis of the factors that contribute to blister formation and illustrated steps for preparation, drying, repairing and coating for moisture protection.

002-150 **Vacuum Bagging Techniques**
A step-by-step guide to vacuum bag laminating, a technique for clamping wood, core materials and synthetic composites bonded with West System epoxy. Discusses theory, molds, equipment and techniques used to build composite structures.

002-740 **Final Fairing & Finishing**
Techniques for fairing wood, fiberglass and metal surfaces. Includes fairing tools, materials and a general guide to finish coatings.

DVD

002-898 **West System Epoxy How-to DVD**
An interactive compilation of three instructional videos.
Basic Application Techniques, a video primer on WEST SYSTEM Epoxy Products and their use, includes safety procedures and application tips for coating, bonding and fairing. **Fiberglass Repair with West System Brand Epoxy** is a guide to structural repair on fiberglass boats. It covers repairs to cored and non-cored panels and how to apply gelcoat over epoxy repairs. **Gelcoat Blister Repair with West System Brand Epoxy** is a guide for repairing and preventing gelcoat blisters on fiberglass boats. It includes an analysis of the factors contributing to blister formation and steps for preparation, drying, repairing and coating for moisture protection.

002-550 Fiberglass Boat Repair & Maintenance

Published by

West System Inc.
P.O. Box 665
Bay City, MI 48707

866-937-8797
www.westsystem.com

14th Edition • 12/06

WEST SYSTEM BRAND ®