WEST SYSTEM BRAND® Epoxy's

Other Uses

Suggestions for Household Repair

First Edition

Catalog Number 000-425

WEST SYSTEM epoxy has been used to reliably build and repair boats for over thirty-five years. But its practical uses are not limited to boats or the marine industry. The techniques used to restore an aging runabout, repair a delaminated fiberglass deck or build a stripper canoe are the same techniques used to restore historic buildings, repair damaged vehicles and build weatherproof outdoor furniture. If you've used epoxy on a boat repair or building project, it's likely you've found other uses for it around your house or shop.

This is an introduction to some of the more common non-marine uses of epoxy. Most of these suggestions deal with repair and restoration problems in an architectural or home environment. They're based on our own home repair projects and suggestions from epoxy users like yourself. We hope you'll be able to adapt these suggestions to your own projects, expand on them and explore new solutions.

Published by West System Inc.

Introduction

These are suggestions and tips for household repair, restoration or building with epoxy. Most of these suggestions are about wood and wood protection, repair or reinforcing. Wood constitutes the largest portion of most houses. It's the most vulnerable part of a house and most likely to need repair and protection.

WEST SYSTEM epoxy is ideal for wood repair and protection. It is highly versatile, and is easily modified for a wide range of household projects. Epoxy is applied to the project using one of three ***Basic Techniques***. Each of these techniques offers many possibilities for use around your house, some of which are listed below.

Coating

WEST SYSTEM epoxy is a structural coating. It's applied in thin layers, usually unmodified, to provide a protective film or barrier, or a stable structural base for filling, bonding and finish coatings.

Use coating techniques to waterproof or seal surfaces that can be damaged by moisture. It's particularly beneficial to coat the endgrain of any new or replacement piece of wood near a source of moisture, such as porch posts, sign posts, the bottom edge of plywood siding or sheathing, endgrain around plumbing openings in walls, floors and cabinets, or any joint or surface that gets wet and is slow to dry. Encapsulate and stabilize wood for long lasting finishes on exterior doors, furniture and signs. Use epoxy to protect metal and electrical parts. Epoxy resists many chemicals and is a good barrier against oil and grease, acids and alkalines.

Filling

Epoxy thickened with a fairing filler is used to fill low areas and gaps, to shape or sculpt a surface, and to blend or smooth surrounding surfaces. Filling is most often done after structural assembly or a repair has been completed.

Use filling/fairing techniques to fill voids, bridge gaps, and shape and smooth surfaces in rotted, cracked or damaged wood sills, thresholds, frames, trim. Patch and level floors before installing tile, carpet or other floor covering. Epoxy thickened with fairing filler can be built up and shaped to duplicate carved architectural details. Epoxy adheres well to metal and it is used as a high-quality auto body surfacing filler.

Bonding

Epoxy is used unmodified or thickened with an adhesive filler to structurally join parts of the same or different materials. Bonding techniques include laminating, hardware and fastener bonding, fabric application and filleting. The materials you are bonding, the size of the bonding area, the load on the joint and the gap between the parts affect the bonding method you use.

Use bonding techniques for structural joining and joint repair, creating bearing surfaces and attaching hardware. Laminate straight or curved wooden structural members, bond scarf joints, fill voids with wooden plugs, repair broken tile and masonry. Bond anchor bolts into wood, concrete and masonry for engine and motor mounts, attaching columns, posts and handrails. Bond metal reinforcing such as screws, bolts, threaded rod and reinforcing bar to connect and increase load capability of beams, trusses or columns. Use epoxy with adhesive fillers for bearing surfaces under columns, beams, machines, thresholds. Bond fabrics to stiffen flexible plywood decks, floors, tables, and other flat panels, reinforce beams, shelves, tool handles, columns, and flagpoles. Fabrics also provide added film thickness and abrasion resistance to decks, work surfaces, chutes, bins, or tanks.

Before you start

The procedures for handling and using WEST SYSTEM epoxy on non-marine projects are the same as for boat building and repair. If you have not used epoxy before, read the WEST SYSTEM *User Manual & Product Guide* for detailed information. Be sure to read all instructions and warnings on the product labels.

When working with epoxy, remember to:

Be Prepared

Before mixing epoxy:

1. Check all parts for proper fit.
2. Be sure all bonding surfaces are clean and dry.
3. Sand nonporous surfaces.
4. Keep application tools, paper towels, clamps and other useful things within reach.

Work Safely

1. Avoid skin contact with resin, hardener or mixed epoxy. Wear protective clothing.
2. Avoid eye contact with resin, hardener or mixed epoxy. Wear eye protection.
3. Avoid breathing vapors or sanding dust. Provide adequate ventilation. Wear a dust mask when sanding epoxy.
4. Read all instructions and safety warnings on product labels.
5. Keep resins, hardeners, fillers and solvents out of the reach of children

Mix carefully

Use WEST SYSTEM Mini Pumps to dispense resin and hardener. Pump one pump stroke of resin for each stroke of hardener. Mix small batches. Mix thoroughly. Refer to the hardener container for working and cure times.

Caution! The chemical reaction that cures the epoxy also generates heat. A couple inches of curing epoxy in a plastic mixing cup can get hot enough to melt the cup and burn your skin. Spread the mixture in a shallow pan to dissipate the heat and extend the working time.

Work Cleanly

Protect yourself and the work areas from spills. Remove uncured epoxy from skin and clothes with a waterless skin cleaner. Remove excess epoxy from work surfaces with the flat end of a mixing stick or with paper towels. Clean residue with solvent.

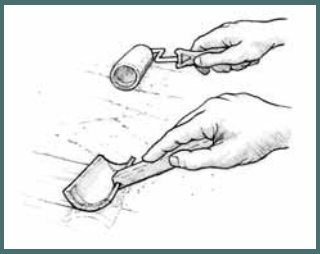

❶ *Sealing & Protecting Surfaces*

Basic barrier coating/smooth coating • Sealing around sinks and counter tops • Sealing knots and flaws in trim • Building abrasion-proof decks • Sealing concrete floors • Sealing plaster and drywall• Sealing wooden posts

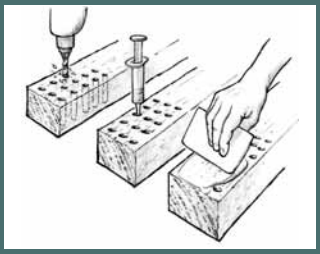

❷ *Repairing Rot Damaged Wood*

Drilling and filling rotted wood • Excavating and filling rotted wood • Excavating and replacing rotted wood • Repairing windows and doors • Repairing thresholds and sills • Molding trim in place

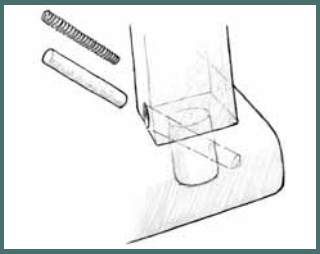

❸ *Joining & Joint Repair*

Laminating custom lumber • Repairing cracked and broken wood • Gluing trim joints • Gluing biscuit joints • Repairing furniture joints

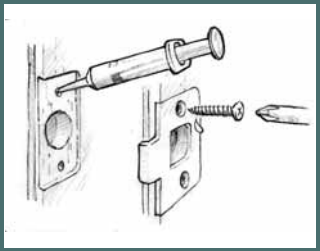

❹ *Bonding Hardware & Reinforcing Structures*

Bonding fasteners • Bonding hardware • Bonding anchor bolts • Splicing posts and beams • Reinforcing sagging wooden beams • Bonding sister planks • Building trusses and beams

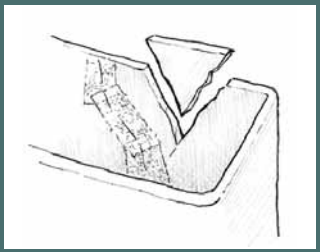

❺ *Tile, Masonry, Metal & Plastic*

Repairing cracked plaster • Reattaching sagging plaster • Bonding bricks and stones • Repairing cracked toilet tanks • Setting tile • Repairing metal and fiberglass auto bodies

The techniques described in this manual are based on the handling characteristics and physical properties of WEST SYSTEM Epoxy products. Because physical properties of resin systems and epoxy brands vary, using the techniques in this publication with coatings or adhesives other than WEST SYSTEM is not recommended. Refer to the current WEST SYSTEM *User Manual & Product Guide* for complete product information, and safety and handing information.

Because West System Inc. cannot control the use of WEST SYSTEM Brand products in customer possession, we do not make any warranty of merchantability or any warranty of fitness for a particular use or purpose. In no event, shall West System Inc. be liable for incidental or consequential damages.

Published by West System Inc., Bay City, Michigan, USA. All Rights reserved. No part of the contents of this publication may be reproduced or transmitted in any form or by any means without the written permission of the publisher.

WEST SYSTEM is a registered trademark of West System Inc.

© March 2005

E1R5 0305

❶ Sealing & Protecting Surfaces

Basic barrier coating

WEST SYSTEM epoxy is a structural coating. It provides a strong, stable interface between the base material and other coatings or other materials bonded with epoxy.

Prepare the surface as necessary for good adhesion. Dispense only as much resin/hardener as you can apply during the mixture's open time, and mix thoroughly. Pour the epoxy into a roller pan. Use a thin foam roller to apply the epoxy in a thin even film.

Smooth coating

An epoxy barrier coating that will not be exposed to sunlight requires only good adhesion and an adequate film thickness. An exposed barrier coat that will be a base for paint or varnish, also requires a smooth, even finish. For the smoothest coating, remember, the thinner the film thickness, the easier it is to control the evenness of the film and avoid runs or sags in each coat—and reduce the amount of sanding required.

When applying the epoxy, roll lightly and randomly over a small area to transfer the epoxy evenly. Increase pressure enough to spread the epoxy into a *thin* even film. Overlap and blend previously coated areas and finish with long, light, even strokes to reduce roller marks.

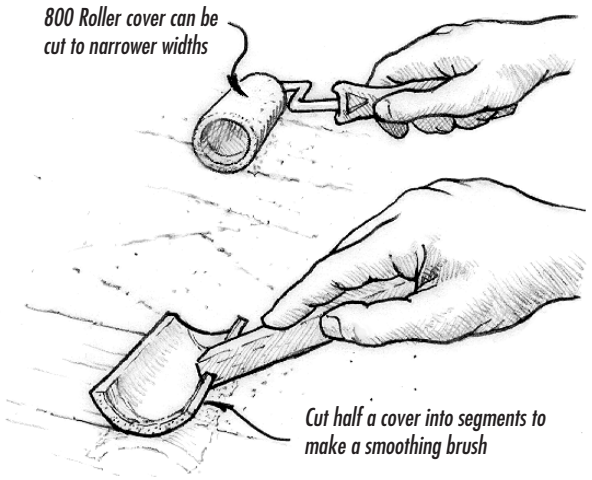

Smooth, or tip off, each batch after it is applied by dragging a foam brush lightly over the fresh epoxy in long, even, overlapping strokes. Use enough pressure to smooth the stipple, but not enough to remove any of the coating. Alternate the direction in which each coat is tipped off, 1st coat vertical, 2nd coat horizontal, 3rd coat vertical, etc. If a batch begins to thicken before it can be applied, discard it and mix a fresh, smaller batch.

Apply second and subsequent coats of epoxy following the same procedures. Make sure the previous coat has gelled enough to support the weight of the next coat. To avoid sanding between coats, apply all of the coats in the same day. After the final coat has cured overnight, wash and sand it to prepare for the final finish.

Sealing around sinks and counter tops

Seal the edges of sink and plumbing cutouts in particle board or plywood counters tops and the the surfaces of high-moisture areas such as dishwasher compartments. Water from leaks beneath drop-in sinks and leaks or condensation from water lines or fixtures can penetrate, swell and rot the counter under the laminate. When repairing damage around sinks and plumbing, shut off the water source, remove the sink or fixture and thoroughly dry the area before coating with epoxy. Excavate and fill any rot before coating.

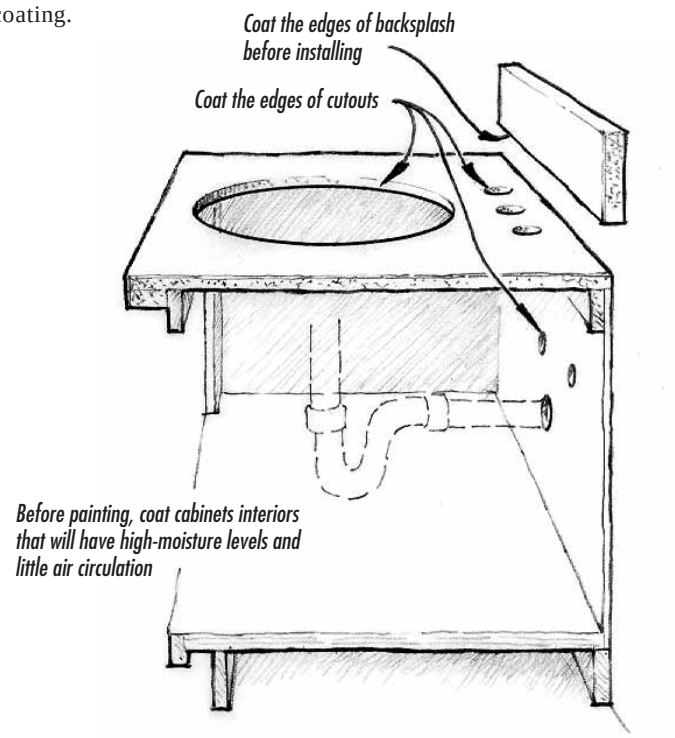

Sealing knots and flaws in trim

Use epoxy to seal knots and fill flaws in lower grades of lumber used for trim. Once it's sanded and painted, you won't be able to tell the difference between it and clear lumber. Mix a batch of epoxy/fairing filler to the consistency of mayonnaise and apply it like any other wood filler, with a plastic spreader or putty knife. Epoxy does a better job of sealing knots and pitch pockets than most wood putties. And it won't shrink, so one application is usually enough.

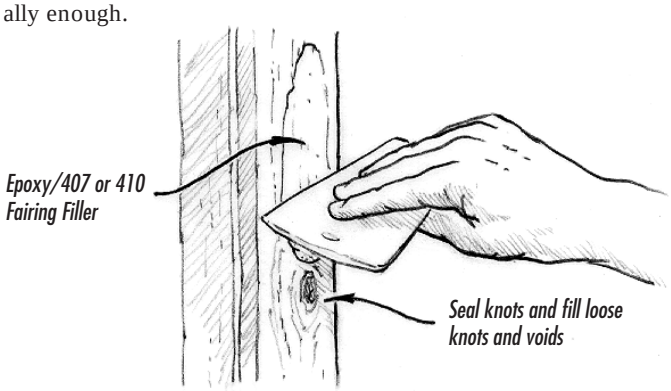

Building abrasion-proof exterior decks

Add extra toughness and stiffness to surfaces like decks, table tops and basketball backboards by applying fiberglass fabric in addition to coating with epoxy. Use exterior-grade plywood. Apply fillets to inside corners and round over all edges before applying fabric. Fill voids and sand smooth before coating. For abrasion resistance, cover surfaces with 12 oz cloth (for heavy duty applications use 737 or 738 Biaxial Fabric). Coat all surfaces with at least three coats of epoxy, applied in the same day. Allow the final coat to cure thoroughly, then wash/sand and paint for UV protection.

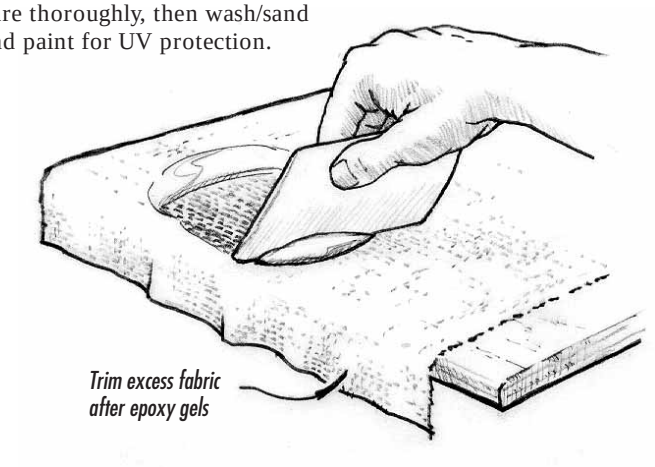

Sealing plaster and drywall

To protect drywall (or plaster) in high-moisture areas like the shower, coat the drywall with West System epoxy before painting or applying tile over it.

If the walls are painted, sand the painted surface thoroughly before applying epoxy. Coat the edges of and, where possible, the backside of plumbing cutouts to prevent leaks or condensation from wicking into the drywall. When repairing damage around plumbing, shut off the water source and thoroughly dry the area before coating with epoxy.

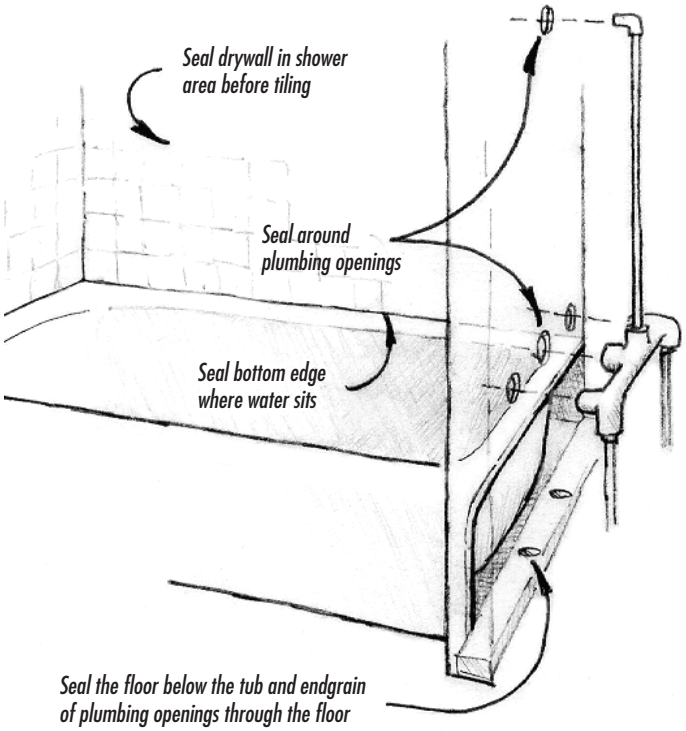

Sealing floors

Epoxy is used on porch decks and under carpeting and wood flooring as a moisture barrier and on concrete garage and shop floors as a finish coating that provides a barrier against grease, oil and chemicals.

This is not recommended for concrete floors that have serious moisture problems or floors that have been previously sealed or contaminated with grease or oil. All of these conditions inhibit good adhesion. Floors should be clean and dry before coating, which can be difficult on floors below grade. Thorough cleaning with detergents may help to clean some stains enough for epoxy penetration and good adhesion.

To apply a thick coating in one operation, mix a batch of resin and hardener. Add an epoxy pigment (such as 503 Gray Pigment) for a solid color finish. Pour the epoxy on the clean concrete floor, and spread it around evenly with a notched trowel or rubber squeegee. Smooth the coating with a thin foam roller on a long extension handle. Allow the epoxy to cure thoroughly. Wash the cured epoxy with an abrasive pad and water, and dry the surface with paper towels, before you apply glue or finish coatings.

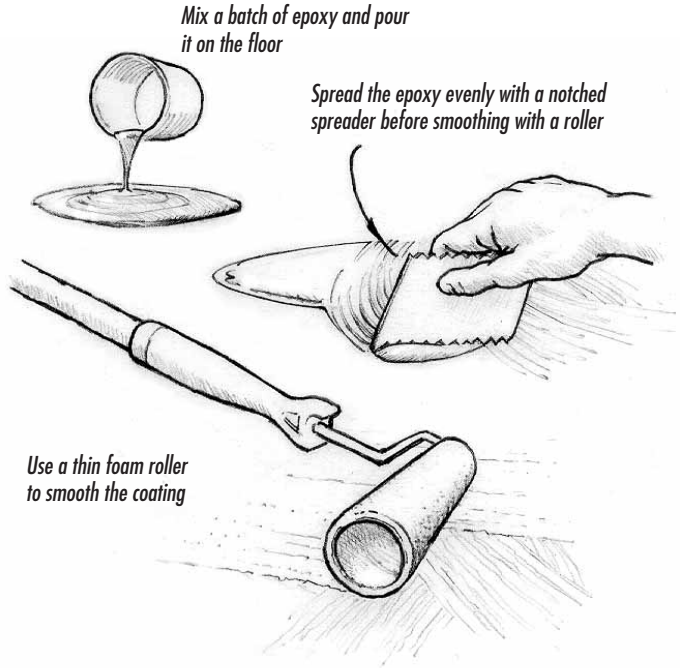

Sealing wooden posts

Since porch decks are often wet, the base of porch columns and posts is a common place to find rot.

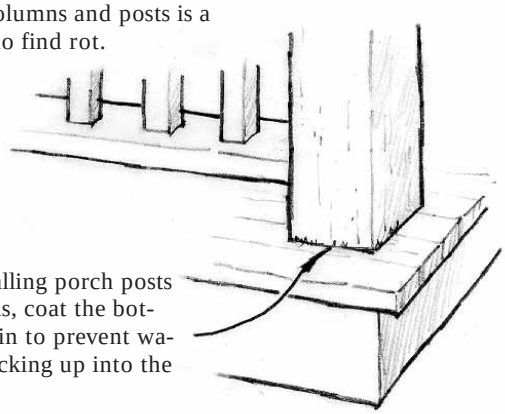

❷ Repairing Rot Damaged Wood

Use WEST SYSTEM epoxy to seal and fill or replace wood damaged by rot. The first step is inspecting and evaluating the depth of the rot and the structural effect of the damage. If the piece is not structural or the damage is shallow, a cosmetic repair may be appropriate. Always dry damaged wood completely before you attempt a repair. For doors, window sashes, railings or other removable pieces, it's easier to move the piece to a shop where you can control the environment and working conditions. For sills, thresholds and other fixed pieces, the drying, preparation and repair can be much more difficult. Often with temporary support, structural members can be removed to make a more thorough repair easier.

Excavating and filling rotted wood

Use a chisel to remove all weak, crumbly wood and leave a clean cavity with solid wood exposed on all sides. Wet out the repair area with epoxy, then add a filler to the remaining mixture and trowel thickened epoxy into the cavity. Fill shallow voids with epoxy/fairing filler. Allow it to cure and sand it to shape. Adhesive fillers are stronger than fairing fillers and could be used for deeper voids in hardwoods. Fill the bottom of the void with epoxy/adhesive filler then top off with epoxy/fairing filler.

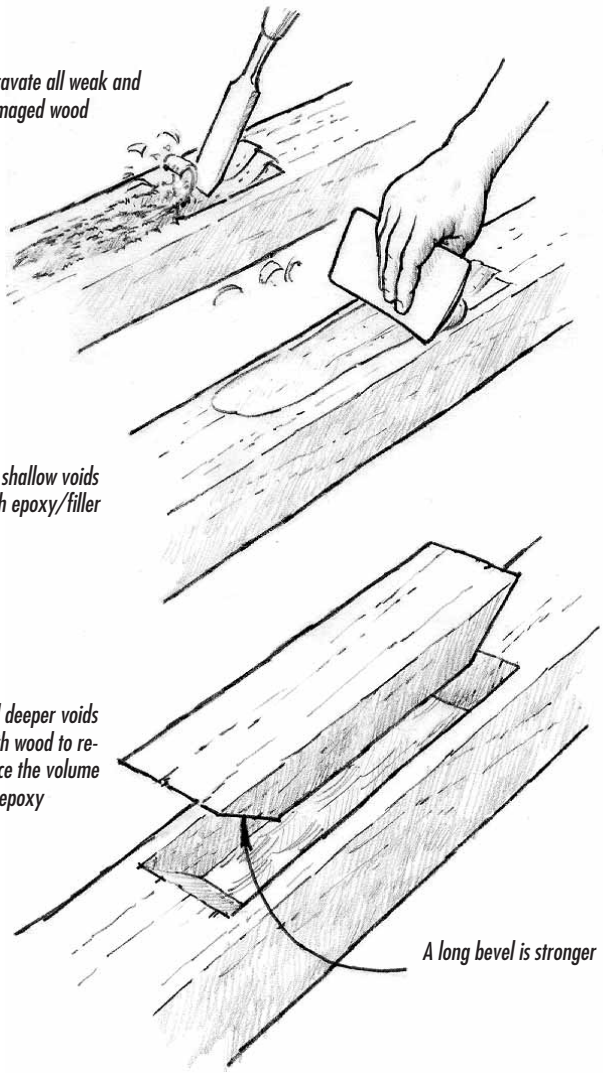

Drilling and filling rotted wood

This method is useful where strength is not important and the rotted area is too difficult to reach for excavating and filling or replacement.

Drill a pattern of 3/16" holes spaced 1" apart over the rotted area. Each hole should be deep enough to pass through the rot, just into solid wood. On vertical surfaces, drill the holes downward at a 45° angle. Dry the area thoroughly. Inject or pour epoxy into the holes until the wood is saturated. For deeper penetration, warm the wood with a heat gun or heat lamp just before applying the epoxy. Allow the epoxy to gel and fill the remaining voids with epoxy/fairing filler. Sand after epoxy cures and paint for UV protection

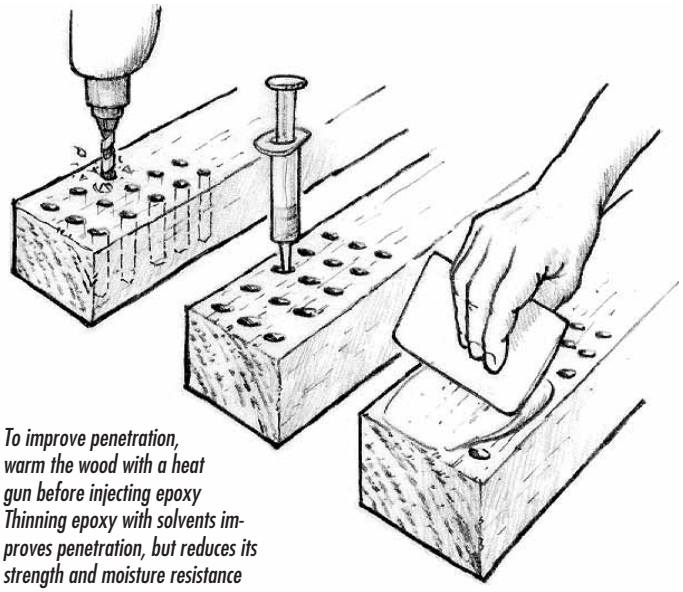

Excavating and replacing rotted wood

For cavities deeper than ½", bond in a wooden plug (or dutchman) shaped to match the cavity. This method will restore strength, save epoxy, and prevent an exothermic reaction.

Use chisel to remove all rotted wood and shape the cavity. Carve and fit a plug to fill the cavity. A long bevel on each end improves the strength of the repair. Try to use the same wood or wood of the same density.

Coat the bonding surfaces of the plug and cavity with epoxy. Thicken the epoxy with adhesive filler and apply enough of it to the cavity to fill any voids between the cavity and the plug. Press the plug into the cavity and if necessary clamp it in place. Wipe away any excess epoxy that squeezes out. Fill any remaining voids with epoxy/fairing filler, allow it to cure and sand it to shape.

If the piece is clear finished, select plug material to match the color, texture and grain of the surrounding surface. You'll want to make the plug fit tight around the edges, and leave the plug slightly high so it can be planed or sanded flush after the epoxy cures.

Repairing windows and doors

This is a widely used method to repair deteriorated stile/rail joints on window sashes, paneled doors and other rotted exterior joints. The example here shows a typical door repair. Some severely damaged doors (such as this one) or windows may not be worth repairing unless they are historically significant or hard to find.

The first four steps show the preparation of a rotted bottom rail/stile joint. The final four steps show the finish of similar rot damage at the center rail/stile.

1. Probe with a knife blade or awl to locate soft wood. Excavate all soft, decayed wood. Use a chisel or router followed by a wire brush to get down to solid wood.

2. Dry the repair area thoroughly. Use a heat lamp or hot air gun to accelerate drying.

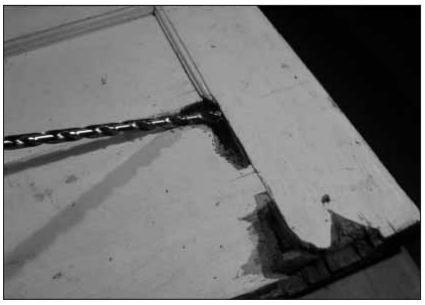

3. Drill holes for reinforcing rods or dowels to tie adjoining pieces together. If necessary, drill through the edge of the stile into the rail. The drill diameter should be slightly larger than the dowel diameter.

4. Wet out all exposed surfaces including the reinforcing dowels and holes. Use unthickened epoxy and re-wet the area until the epoxy no longer soaks in. Epoxy will penetrate deeper if the area is warmed

Note: If you've removed glass for the repair, it's a good opportunity to seal glazing surfaces that show signs of decay—especially along the bottom edge.

Use a male mold to help shape inside corners. Cut the mold from scrap to fit into the glazing recess. Cover all mold surfaces exposed to epoxy with packaging or duct tape or wrap with plastic. Clamp the mold in position until the epoxy cures. Step 6 (below) shows a mold in place. Step 7 shows the mold removed after the epoxy/fairing filler has cured.

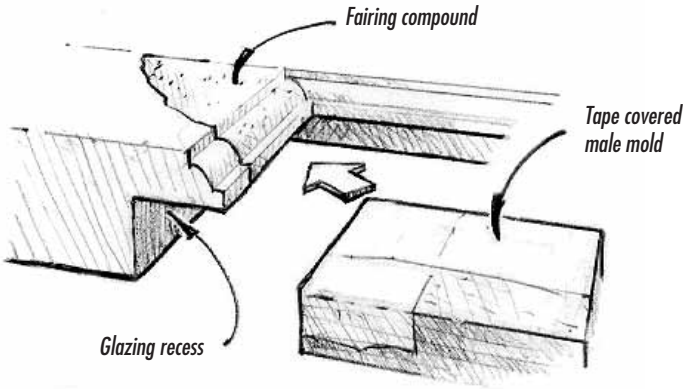

5. Install dowels with thickened epoxy. Apply enough epoxy/adhesive filler to fill all voids around the dowels or rods. Be sure parts are clamped or resting in their proper position. Allow the epoxy to gel.

6. Fill the remaining voids with epoxy/fairing filler mixed to a peanut butter consistency. For larger voids, use a wooden plug or structural foam carved to match the cavity. Bond the plug in with epoxy/fairing filler.

7. Carve and sand the repair to shape. Any remaining flaws can be filled with epoxy/fairing filler or spackling.

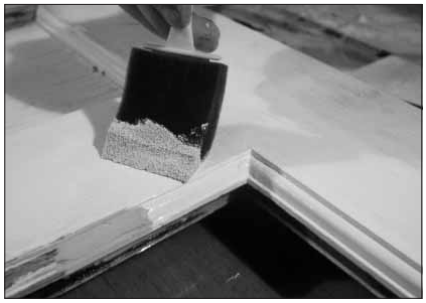

8. Prime and paint for UV protection.

Repairing thresholds and sills

This method uses a simple female mold to control the shape of the repair. The sides and bottom of the mold will wrap and enclose the threshold. As you cut each piece for the mold, wrap it in packaging tape or plastic so the epoxy won't stick to it.

Use a chisel or rasp and a wire brush to remove loose fiber from the ends of the threshold. Open small cracks and checks with a chisel. Make sure the wood is dry. Coat the end grain, cracks and checks with epoxy. Continue to apply it until the wood absorbs all it can.

Add adhesive filler to the epoxy until it reaches a non-sag consistency and apply to the inside corners of the mold. Smear some of this mixture around the end of the threshold and prop the mold in place under the threshold. Trowel thickened epoxy into the ends of the mold to fill any remaining spaces and cracks.

Remove the mold after the epoxy cures, then use a file and sander to do a little final shaping. Paint the repaired threshold to protect it from sunlight.

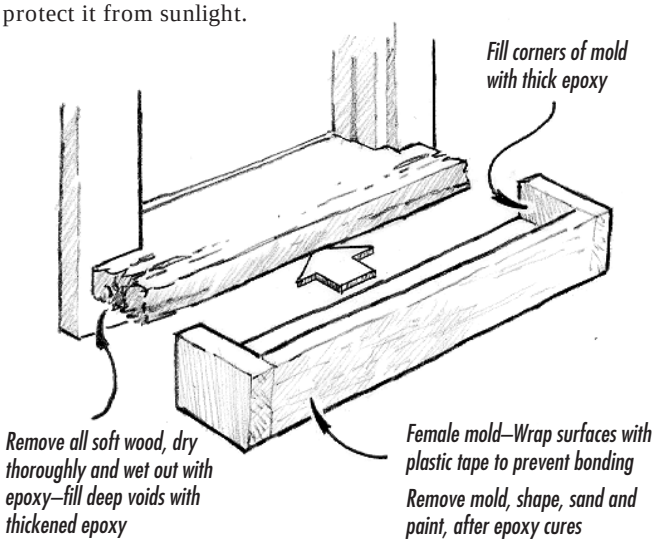

Molding trim in place

Fill damaged sections of custom woodwork or older styles of trim that are no longer readily available. Use a chisel to remove loose and high spots in the damaged trim. Build up the surface with a mixture of epoxy and fairing filler. Use a thin straightedge to screed the fairing compound to shape. Use the adjoining trim to guide the straightedge. Don't work the compound too much. When it's close to the right shape, allow it to cure. Trim off high spots with a plane or chisel. Use the straightedge as a guide. Repeat the process to fill low areas until the filled section matches the adjoining trim. When fully cured, sand and paint it.

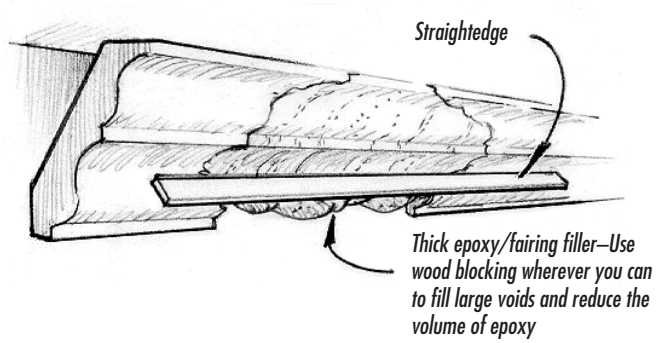

Laminating custom lumber

Laminate structural and trim pieces to any shape or size with WEST SYSTEM epoxy. Pieces can be produced in a reusable jig or laminated in place. Rip or mill pieces thin enough to bend to the desired shape.

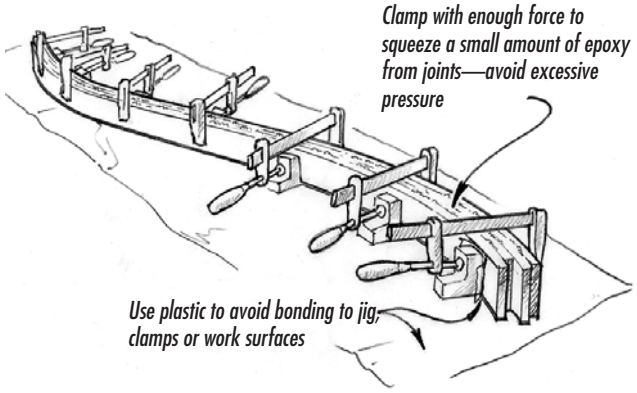

Note: If you've used a thickness planer to mill hardwood strips, it's a good idea to sand the bonding surfaces with coarse grit sandpaper before bonding. A rougher surface provides better epoxy penetration and adhesion.

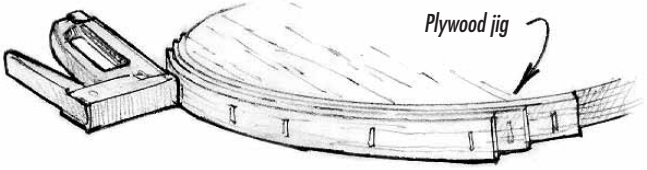

Use staples to clamp thin strips—drywall screws on thicker strips
Fasteners can be left in or removed on outer layer

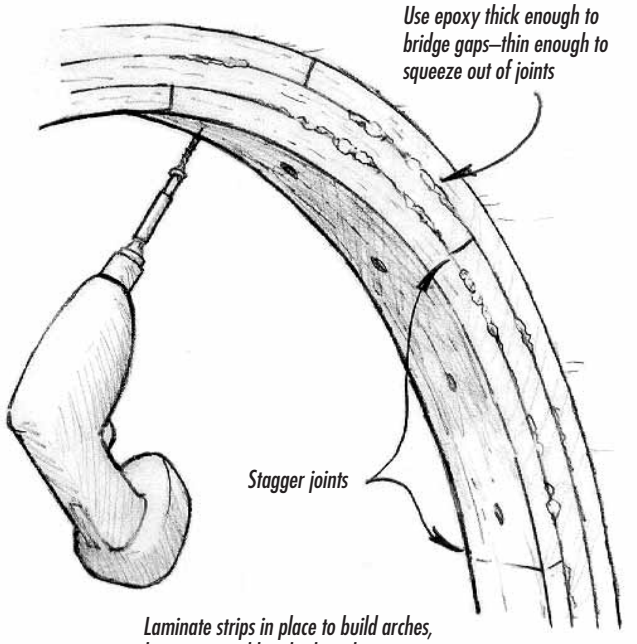

Laminate strips in place to build arches, beams, curved handrails and stringers

❸ Joining & Joint Repairs

Many joints in both new construction and repair can be bonded with WEST SYSTEM epoxy for greater strength than with mechanical fasteners alone. Epoxy also seals joints from moisture, inhibiting rot and reducing shrinking and swelling. Epoxy fills gaps and reduces flexing, while eliminating the need for precisely fitting joinery.

Gluing trim joints

Interior trim joints look better and stay tight longer if they are glued. Use G/5 Five-Minute Adhesive to glue joints together when you nail the trim in place. To avoid splitting thin or delicate pieces, tape or hold them in place until the adhesive cures. G/5 hardens quickly and is clear so you cannot see the glue line.

Repairing furniture joints

Loose mortise and tenon joints can simply be glued back together with WEST SYSTEM epoxy, if the piece or pieces come completely apart. Clean old glue and contamination from the bonding surfaces. Coat the joint with epoxy and clamp the parts in position until the epoxy cures.

You can also repair loose joints even if the pieces are still connected. With the pieces fixed in position, drill a hole through the joint at about a 45° angle. Drill from the least conspicuous side and don't drill all the way through the bottom piece.

Gluing biscuit joints

If you own a biscuit joiner, consider using WEST SYSTEM epoxy instead of yellow glue for certain assemblies. You can bond the miter joints in exterior trim like fascia or window trim boards. Although the biscuits don't swell as they do with yellow glues, they do keep the joint lined up while the epoxy bonds the joint and seals the end grain. Epoxy with slow hardener is useful for complicated assemblies that require more working time than yellow glue.

Repairing cracked and broken wood

To repair wood that has broken along the grain, first dry fit the pieces and remove any splinters that prevent a tight fit. Coat both exposed broken areas with epoxy. If there are any gaps or missing pieces, stir adhesive filler into the remaining mixture until it is thick enough to fill the gaps. Smooth the thickened epoxy into the void, then clamp pieces together until the epoxy cures. Wipe away any excess epoxy that squeezes out.

If you want to maintain a natural wood finish, use a wood-toned filler so the repair area will be less noticeable. You can also adjust the color of the epoxy by adding powdered tempera paints, powdered aniline dye or some sanding dust from the wood you are working on.

Note: These repairs are intended to be permanent. They are not suitable for projects that may require disassembly later. These techniques may not be suitable for furniture of historical significance.

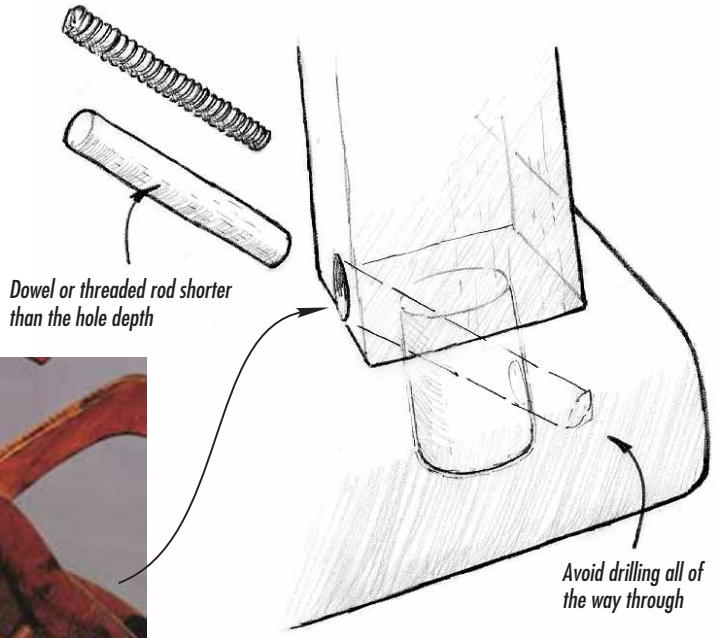

Inject epoxy into the hole and push a dowel or threaded rod into the hole. A tight fitting dowel will force epoxy into all voids in the joint. Clean excess epoxy as it squeezes out.

❹ Bonding Hardware

Bonding fasteners

Installing screws and other threaded fasteners with WEST SYSTEM epoxy dramatically improves load carrying capacity. The easiest method is to simply wet out stripped fastener holes and new pilot holes before installing the screws. Epoxy penetrates the fiber around the hole, effectively increasing the fastener diameter. Epoxy also provides a stronger interface with the fastener threads than wood fiber and keeps out water.

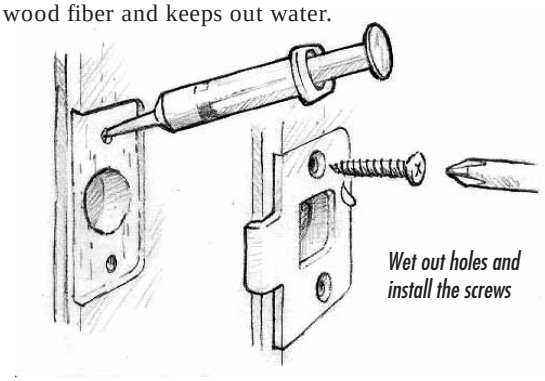

For even greater strength and stability, drill oversized holes 2/3 the depth of the fastener. Wet out the holes and the fastener with epoxy, then fill the hole with thickened epoxy/adhesive filler. Use 404 High-density (preferred) or 406 Colloidal Silica. Install the fasteners with just enough force to hold the hardware in place.

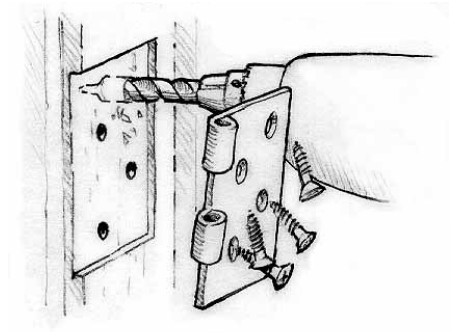

1. Drill oversized holes

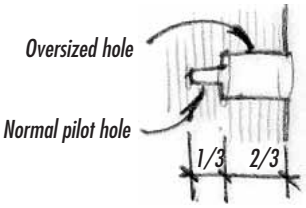

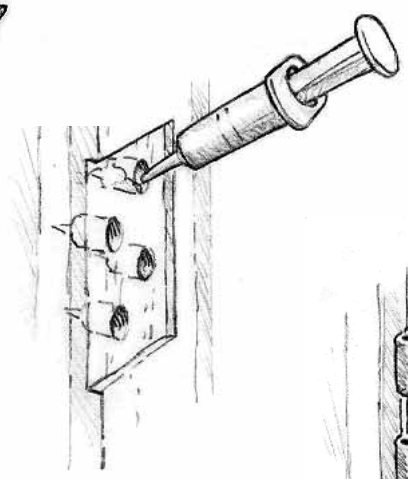

2. Wet out holes and fill with thick epoxy

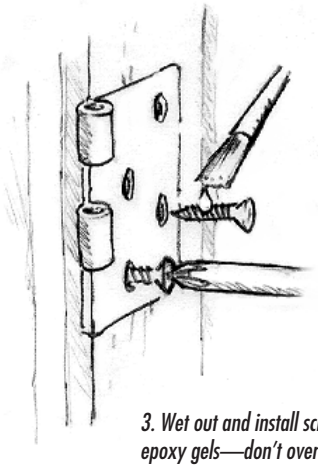

3. Wet out and install screws before epoxy gels—don't over tighten

Bonding hardware

Bonding hardware goes one step beyond bonding the fasteners only and provides a solid bearing surface for the hardware. It also seals the wood underneath, preventing moisture from softening the door or corroding the hardware. This provides a stronger, longer lasting attachment for security hasps and hinges.

WEST SYSTEM epoxy adheres well to most metals as long as you prepare the surface properly. Cleaning with solvent and sanding is enough preparation for most metals.

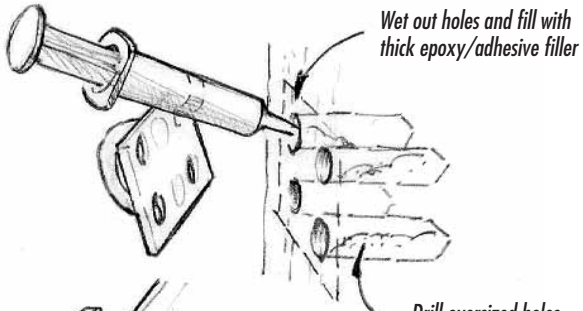

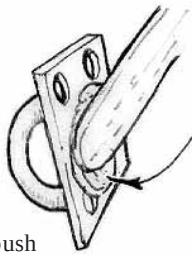

You can also coat the fastener, push it into the freshly applied thickened epoxy and clamp or brace the hardware until the epoxy cures. Screws or bolts bedded in this epoxy will not move. They hold the hardware tight against the door or frame and resist tension and compression loads.

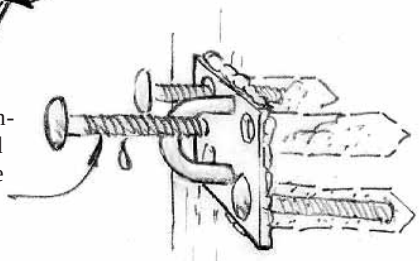

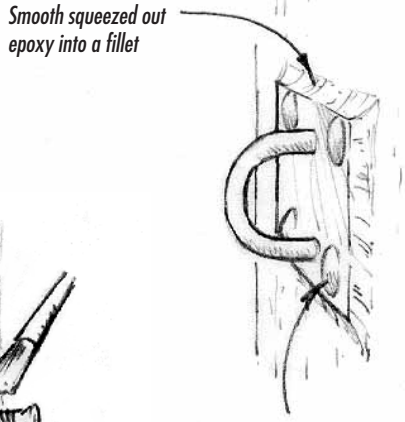

For additional security, carriage bolts have a smooth, low profile that makes it difficult to gain purchase with a pry bar and eliminates the possibility of using a wrench to loosen the fasteners.

Bonding anchor bolts

One of epoxy's best uses is to bond anchor bolts into concrete. The principle is the same as for wood. Drill an oversized hole. Wet out the hole with epoxy. Then place the bolt or threaded rod in the hole. It's a good idea to put a nut on the threaded rod so that its top is barely above the surface. This helps to reduce the creep load on the epoxy when the hardware item is tightened down.

Bonding multiple bolts in oversized holes at the same time assures all the bolts are perfectly aligned, even if the holes are drilled a little off.

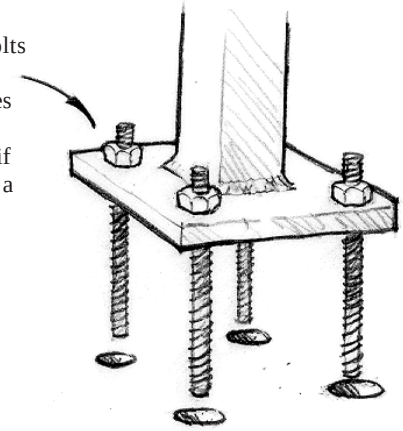

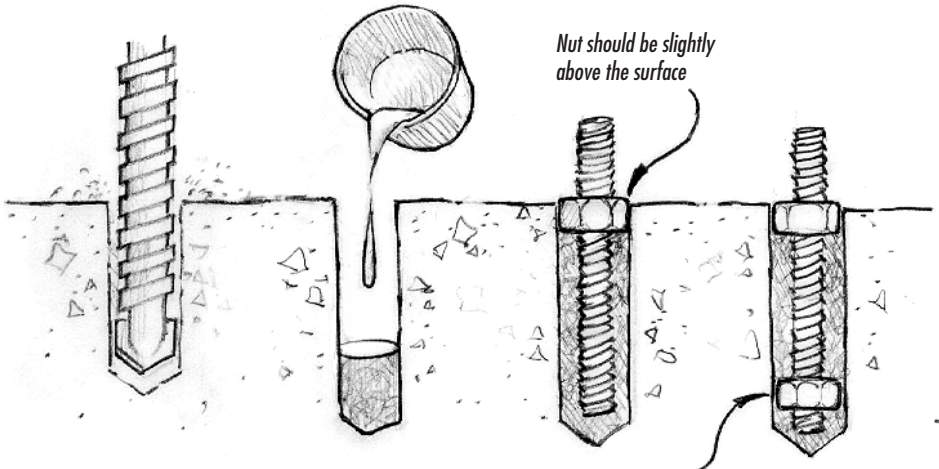

If you would like to be able to remove the fastener after the epoxy cures, place a second nut at the bottom of the fastener and coat the fastener threads with paste wax before bonding the fastener in.

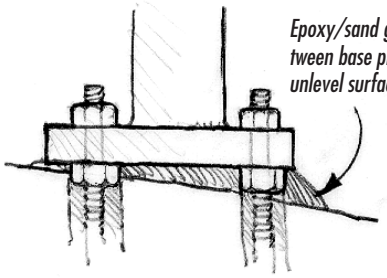

& Reinforcing Structures

Splicing posts and beams

Because the joints connecting them can trap water, the ends of beams and the bottom of posts in older structures often deteriorate. In many cases, the structure can be saved by splicing new wood onto the ends. The proper joint between the two pieces can make the repair as strong as the original solid piece.

A scarf joint reduces the load on any one point of the glue line by increasing the gluing area.

The longer the scarf angle—the greater the bonding area—the stronger the joint

Where a scarf joint is not practical, a strong joint can be achieved by effective placement of reinforcing rods.

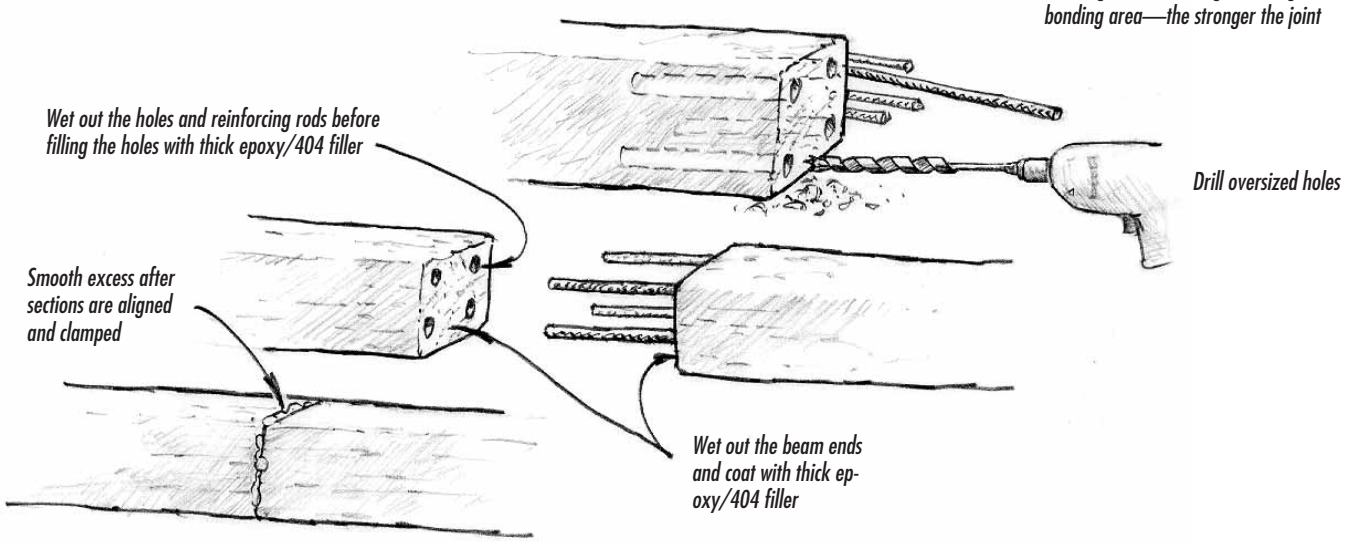

Reinforcing sagging wooden beams

You can use WEST SYSTEM epoxy and concrete reinforcing bars to reinforce sagging wooden beams in place. Rout a groove in the bottom surface of the damaged beam so that it will accept a standard steel reinforcing bar. ($\frac{9}{16}$" × $\frac{9}{16}$" groove for a ½" bar)

Use floor jacks to raise the sagging beam to the desired level. Place a jack on each side of the groove, or use blocking to keep the groove accessible. Raise the beam very slowly, especially if walls or other parts of the structure bear on it. Also consider plumbing in floors and walls that may be affected. Get engineering help if you are unsure of the effect of raising the beam.

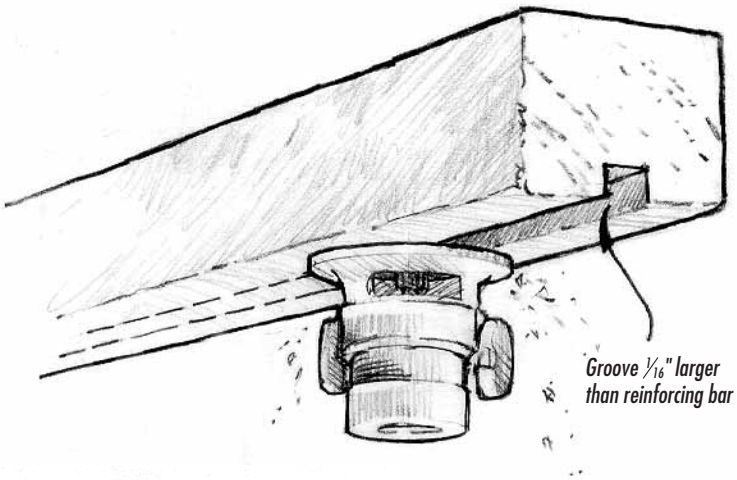

Wet out the groove with epoxy. Then fill the groove half-full with epoxy/adhesive filler, thickened to the consistency of peanut butter. Press the reinforcing bar into it.

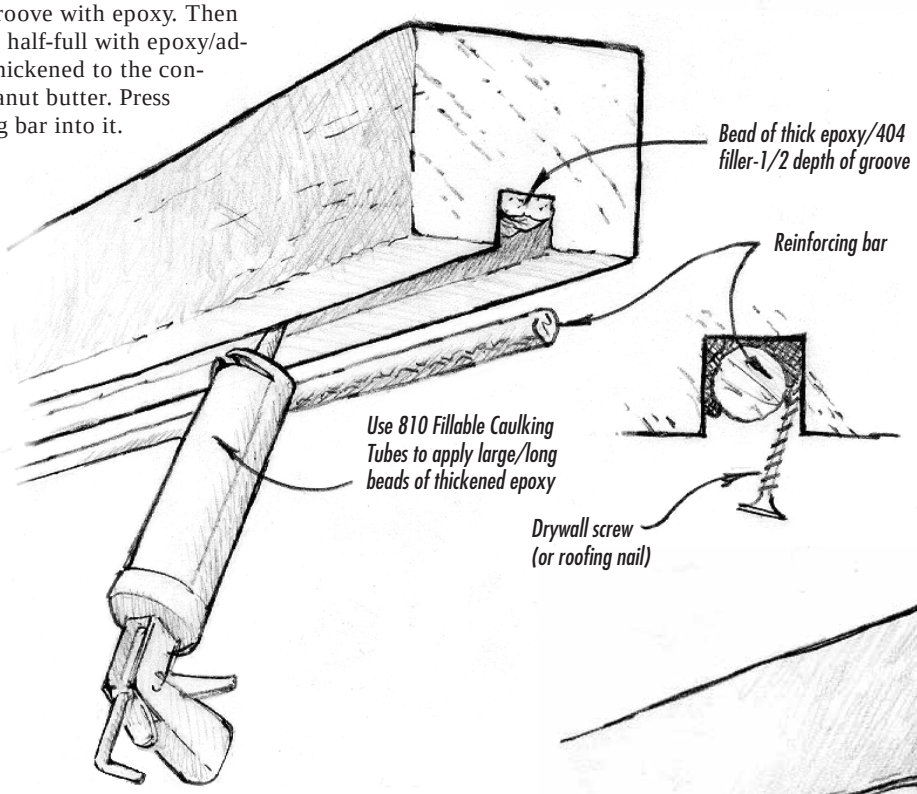

Hold the bar in place by driving drywall screws or roofing nails alongside the reinforcing bar at 12" intervals. Fill the rest of the groove with thickened epoxy and clean up any excess. Allow the epoxy to cure thoroughly before removing jacks.

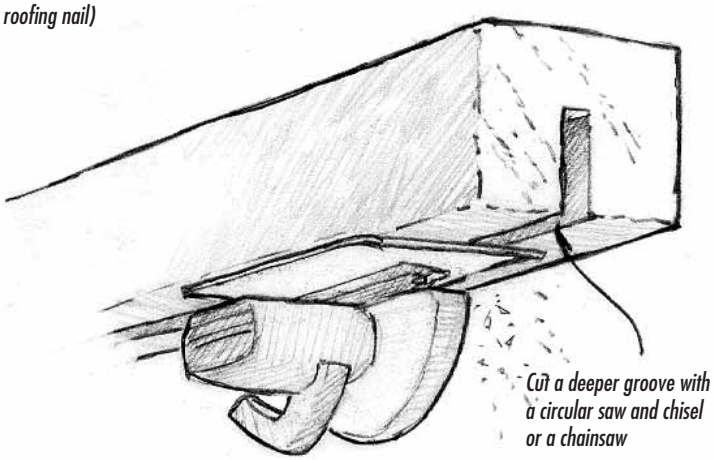

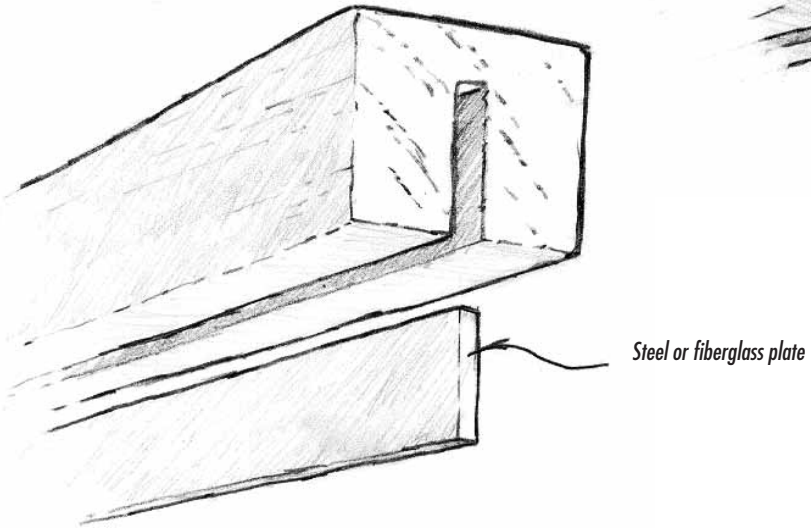

An alternate reinforcing method is to use a flat plate of steel or fiberglass. Cut a deeper, narrower slot with a circular saw or chain saw. The flat plate acts as the web of an "I" beam, held in column by the wood beam rather than to top and bottom flanges.

Bonding sister planks

Where structural members have been damaged by rot or weakened by cutouts for plumbing or ductwork, you can build up the strength of the member by gluing additional pieces or sister planks on one or both sides.

A bonded joint is far superior to a nailed joint in transferring the loads. It is usually best to carry these sister planks as far as possible beyond the problem area. If necessary, jack the joist or rafter into position. Use enough epoxy/adhesive filler to get good glue squeeze-out. Use drywall screws to clamp the plank. Clean up the excess and allow the epoxy to cure before removing jacks.

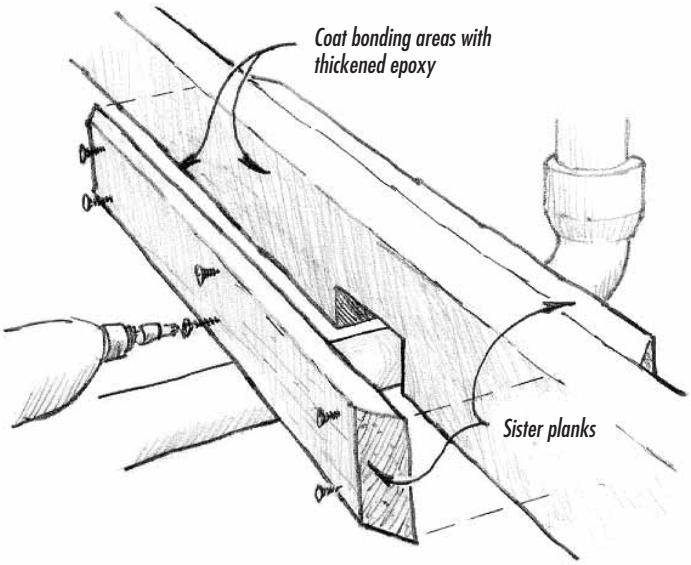

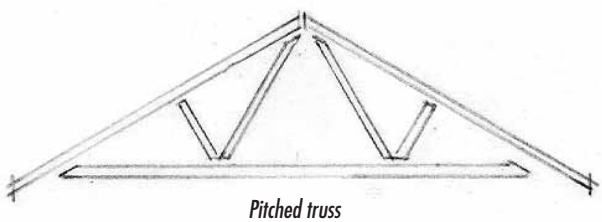

Pitched truss

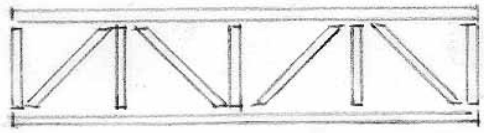

Flat truss

Building trusses and beams

When repair of a structural problem requires a non-standard truss or beam, you can construct one in place or off site.

CAUTION! Dimensions and materials of structural members are governed by spans and anticipated loads. Consult an engineer or architect.

Cut and fit top and bottom chords and bracing to the proper span and pitch. Use plywood gussets on both sides of each joint. Use full-width plywood panels on both sides for box beams. Assemble and bond the braces and gussets in place with epoxy/adhesive filler. Use drywall screws or nails to hold everything in place until the epoxy cures. For added strength, you can bond steel reinforcing bar into dadoes cut in the truss chords.

Epoxies, as well as wood, can creep when the structure is subjected to load at higher temperatures. Use extra screws or nails along with the epoxy in areas, such as poorly ventilated attics, that may get hot for long periods.

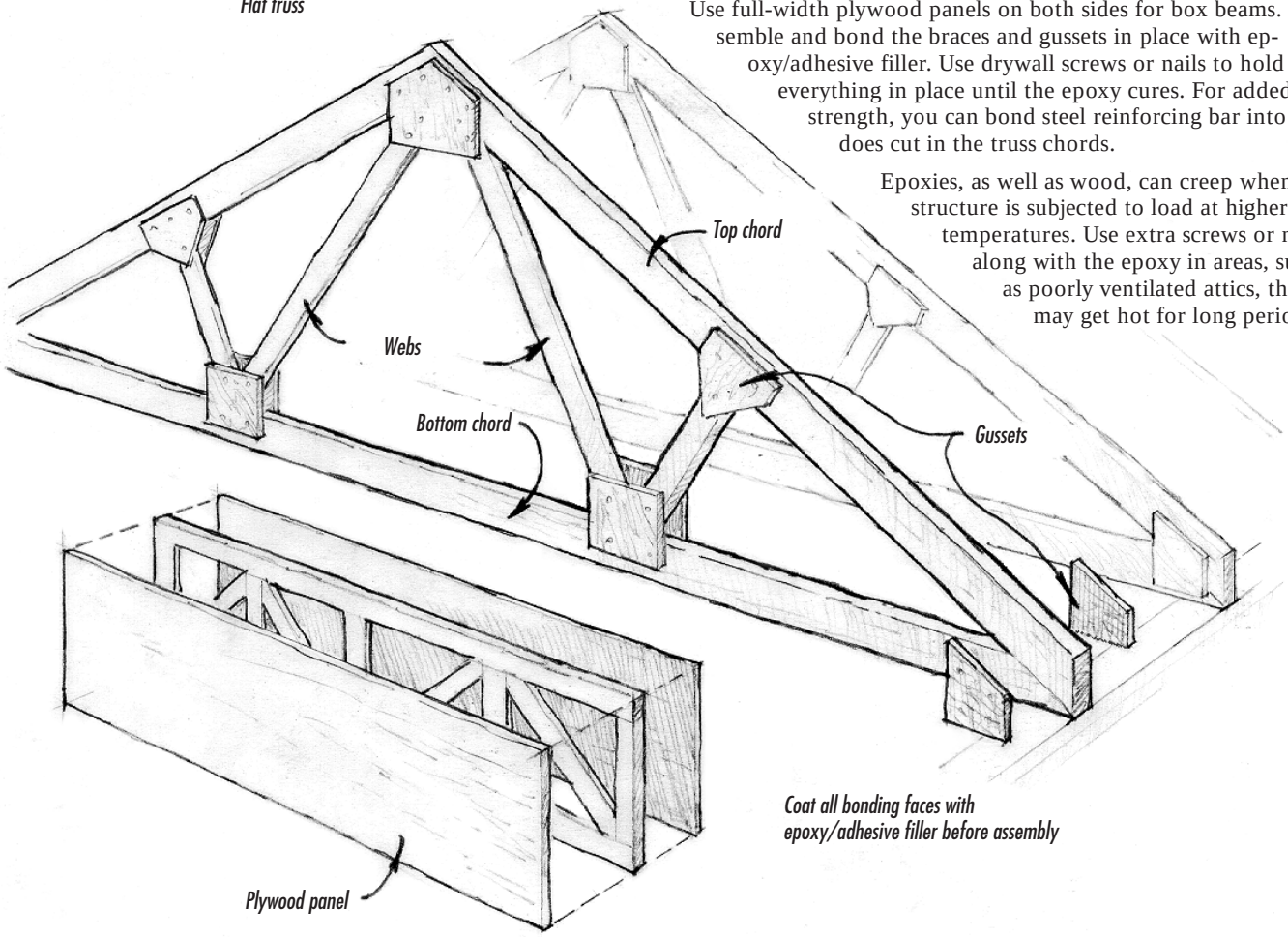

❺ Tile, Masonry, Metal & Plastic

Repairing cracked plaster

Plaster is usually made up of two layers: one facing the living area, called the "white coat" and the other beneath it, called the "brown coat." When a crack appears in the white coat on the surface, it is usually because the brown coat has cracked.

To make the most effective repair, scrape open the crack with a "V" shaped tool well into the brown coat. Wet the brown coat with epoxy and let it stand for about an hour. Mix epoxy/adhesive filler to a peanut butter consistency. Trowel the thickened epoxy deep into the crack. Leave the repair slightly concave so you can use a dry-wall compound to fill the white coat flush with the surface. After the epoxy has gelled, use a wire brush on it so that the topping compound can key into its surface.

Repairing cracked toilet tanks

Epoxy will bond to the porous side of ceramic materials like toilet tanks. To repair a cracked or broken tank, first dry the tank thoroughly. Broken pieces should fit tight so the epoxy will not need to be thickened. Coat the broken edges and fit the pieces together. A small bead of epoxy should squeeze from the joint. Allow the epoxy to cure. Clean the bead of epoxy from the exposed outside with a single-edged razor blade. On the inside, apply a layer of fiberglass tape over the joint for reinforcement. Allow the epoxy to cure thoroughly before refilling the tank. If any small chips are missing, fill the void with thick epoxy/adhesive filler. Add white pigment to the mixture on exposed sides make the repair less noticeable.

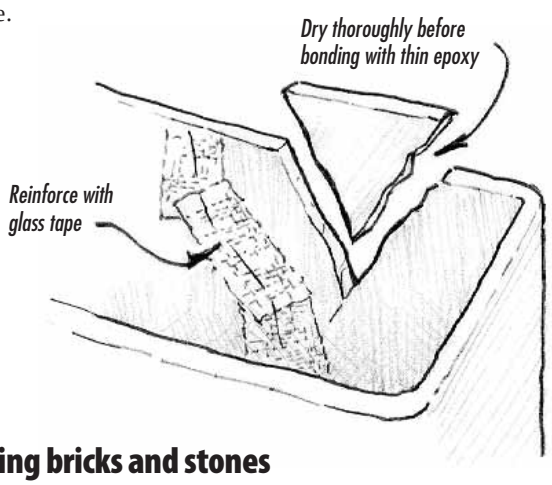

Bonding bricks and stones

Loose or broken bricks can be bonded with West System epoxy. If the mortar is solid and the gap is small, use a non-sagging epoxy/adhesive filler mixture thickened to a mayonnaise consistency. Apply a layer to the inside of the cavity and push the broken brick into place.

If the mortar is loose or missing, make a bonding grout of epoxy/adhesive filler and masonry sand. Add a little dry cement or mortar for color, and apply it to the bonding surfaces as you would mortar. Be careful not to get epoxy on the face of the brick.

You can bond stones with West System epoxy for decorative landscaping that will appear dry laid (without mortar). The stones should be clean and dry. Use epoxy/adhesive filler thickened to the consistency of peanut butter to chink stones in strategic places that will prevent the laid up stones from shifting or settling.

Repairing cracked concrete

West System epoxy is an appropriate repair material for cracked concrete. Just clean the loose debris from a crack and pour or inject epoxy into the crack. For larger cracks and on walls, add a little Portland cement powder (or just about any other powder) to thicken the epoxy so it will stay in the crack, and force it into the seam. Once the epoxy cures, the crack will be sealed with a water-resistant filler that won't shrink and fall out.

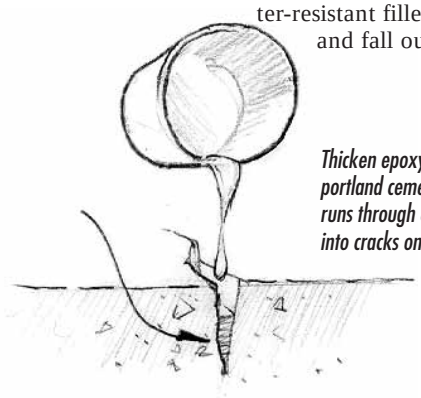

Thicken epoxy with adhesive filler or portland cement if unthickened epoxy runs through crack. Trowel thick epoxy into cracks on vertical surfaces.

Reattaching sagging plaster

Where plaster has let go of the lath and is sagging, carefully drill a few holes through the plaster. Mix epoxy/adhesive filler to a mayonnaise consistency and inject into the holes with a fillable caulking tube or syringe. Clamp the plaster back into place against the lath with a brace from the floor or use wood blocks and drywall screws to draw the loose plaster tight against the lath. Allow to cure. The epoxy will grab both the lath and adjacent plaster, holding them together. Remove the blocks or bracing after the epoxy cures. Touch up the holes with spackling or drywall compound.

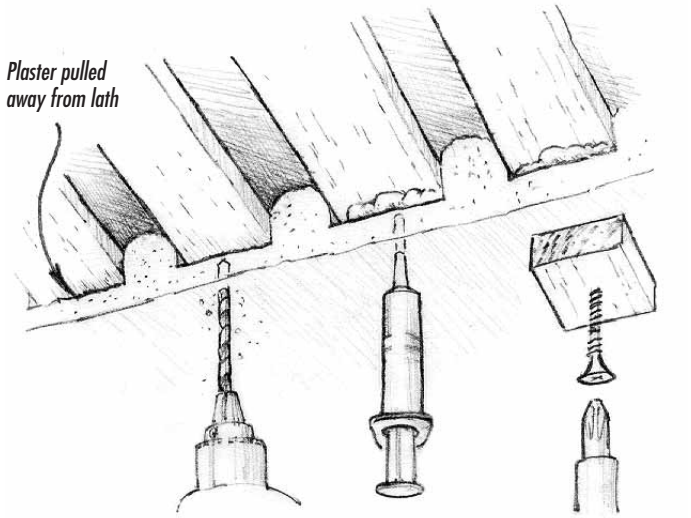

1. Drill small holes several inches apart in the area of loose plaster. Drill through the plaster only.

2. Inject thickened epoxy between plaster and lath, then plug the holes with

3. Draw plaster to lath with wooden block washers and drywall screws or use bracing to clamp plaster against the lath.

Repairing metal and fiberglass auto bodies

You can repair badly corroded or damaged body panels with WEST SYSTEM epoxy and fairing filler. Epoxy is stronger, more waterproof and it bonds to metal better than polyester body fillers. Where the metal is missing completely, you can rebuild the area by saturating fiberglass cloth with epoxy and using it to bridge the holes. When the epoxy hardens, you will have a rigid backer that will anchor the remainder of the repair.

Remove all rust and loose material. Grind or sandblast down to bright metal. Apply a thin coat of epoxy to the prepared surface and while the coating is still wet, abrade the surface with a wire brush or sandpaper. Work the wet epoxy into the steel. When the coating gels and while it is still tacky, either apply the wet fiberglass cloth or fill the dents or pits with thick epoxy/fairing filler. Allow the epoxy to cure hard and sand it smooth. Recoat sanded fairing filler to seal it. Allow the final epoxy coat to cure and wet sand it. Paint the repair area with standard automotive paints.

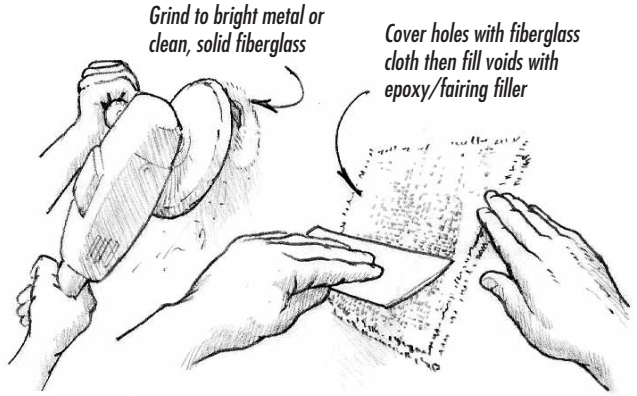

Setting tile

WEST SYSTEM epoxy stabilizes the substrate to provide tiles an unchanging surface. After removing the old floor covering, lay out the plywood or concrete backer board underlayment. To prevent cracks from developing in the finished tile job, you can glue the butt joint areas of all panels to the subfloor. You can glue the entire underlayment to the subfloor, but we especially recommend treating the joint areas. Use epoxy/fairing filler to fill voids and dips in the subfloor before installing the underlayment.

You can also use a slurry of epoxy/adhesive filler to set tile, which you can apply with a notched spreader. Experiment with the notch size spread rate to get the correct adhesive amount for the style of tiles you are installing. Set the tiles into the adhesive mix and press firmly to make sure that the tiles are well set and the bottom of each tile has full contact with the adhesive. Clean up excess before cure. Finish the floor with regular grouting.

Bonding PVC plastic

Typically, epoxies don't adhere well to many plastics because these surfaces are too smooth to allow a mechanical bond. But with proper preparation, you can achieve excellent adhesion of WEST SYSTEM epoxy to PVC plastics. First, clean the bonding area with PVC cleaner. Next apply a thin coating of PVC cement and wipe off the excess. The PVC cement coating should be as thin as possible. Wait until the cement has completely dried and apply epoxy over it. The PVC cement enhances the adhesion of the epoxy. Using this technique, you can bridge gaps that are too big for PVC cement or bond PVC to any other material that WEST SYSTEM epoxy will stick to. (Both the cleaner and PVC cement are available at hardware or plumbing stores).

Share your ideas

These suggestions describe some of the more common uses for WEST SYSTEM epoxy around the house. But, they are by no means the limit of what you can do with epoxy. Many WEST SYSTEM epoxy users have discovered its versatility and have used it to solve a wide range of problems around the house, shop, and garage.

You may have found a great solution to a problem not listed here. You may have a better solution to one of these problems. Or, you may have a simple tip to make handling epoxy easier, quicker or safer. If you have tip or suggestion and would like to share it, we'll include it in future editions of Other Uses. A sketch or photograph would be helpful. Send your suggestions to:

Other Uses
West System Inc.
PO Box 665
Bay City, MI 48707

Fax: 989-684-0687
E mail: ideas@westsystem.com

Resources

For more information about repair and building with WEST SYSTEM epoxy, West System Inc. also publishes the following:

002-950 WEST SYSTEM User Manual & Product Guide
The primary guide to safety, handling and the basic techniques of epoxy use and complete descriptions of WEST SYSTEM epoxy products.

002 The Gougeon Brothers on Boat Construction
The Book—for anyone building a boat or working with wood and WEST SYSTEM epoxy.

002-970 Wooden Boat Restoration & Repair
An illustrated guide to restore the structure, improve the appearance, reduce the maintenance, and prolong the life of wooden boats with WEST SYSTEM epoxy.

002-550 Fiberglass Boat Repair and Maintenance
A complete guide to repairing fiberglass boats with WEST SYSTEM epoxy.

002-150 Vacuum Bagging Techniques
A step-by-step guide to vacuum bag laminating, a technique for clamping wood, core materials and synthetic composites bonded with WEST SYSTEM epoxy.

002-740 Final Fairing & Finishing
Techniques for fairing wood, fiberglass and metal surfaces.

002-892 Basic Application Techniques (VIDEO)
A video primer on WEST SYSTEM epoxy products and their use. VHS–20 min.

These publications are available through your local WEST SYSTEM dealer. For the name of your nearest dealer or for additional information call 866-937-8797 (toll free).

The dealer list and basic technical information is also available at the WEST SYSTEM web site: www.westsystem.com

build cored and solid doors ▪ build human powered submarines ▪ build artificial limbs and braces ▪ build spiral staircases ▪ build fishing rods ▪ build bathtubs ▪ build aerodynamic bicycle wheels ▪ acoustical panels for a concert hall ▪ bond anchor bolts into stone and concrete ▪ build electric guitars ▪ bond ceramic tile ▪ barrier coat exterior doors and windows ▪ build dinosaur skeleton reproductions ▪ seal table tops ▪ seal concrete floors ▪ build body parts for Indy cars ▪ seal the base of pilings and posts ▪ build hockey skates ▪ build hovercraft ▪ restore exterior woodwork ▪ build water skis ▪ build a parabolic telescope mirror ▪ laminated bridge beams ▪ build cellos ▪ build and repair telephone and power poles ▪ restore carousel horses ▪ line the walls of deteriorated sewer pipe ▪ cast reproductions of carved woodwork and hardware ▪ build archery bows ▪ build aircraft propellers ▪ coat the interior of bird houses ▪ build graphite/epoxy calipers ▪ build pianos ▪ repair automobile bodies ▪ build photo developer tanks ▪ build dog sleds ▪ build handicap accessible showers ▪ build epoxy/bronze powder cast relief sculpture ▪ build surfboards ▪ build hot tubs ▪ build skateboards ▪ build experimental electric cars ▪ build mechanical animals for movies ▪ build aircraft ▪ lock nuts against vibration on machinery ▪ build soap box derby cars ▪ build jewelry ▪ build underwater propulsion devices ▪ build gondolas for blimps ▪ build R/C boat hulls and airplanes ▪ build windows ▪ build satellite antennas ▪ create look-a-like food for menu photographs ▪ build acoustic guitars ▪ build an X-ray generator ▪ build drum frames ▪ coat floors for chemical resistance ▪ build sailboards ▪ build speaker cabinets ▪ build fishing reels ▪ build race cars ▪ repair damaged timber framing ▪ build wood/canvas lampshades ▪ build opera house sets ▪ build costume masks ▪ build laminated beams ▪ build epoxy/wood sculpture ▪ build bicycle frames ▪ build museum displays ▪ repair trunk decay in bonsai trees ▪ build fishing lures ▪ build racing ice skates ▪ build fencing foils ▪ build plywood aquariums ▪ fill holes in bowling balls ▪ build violins ▪ manufacture bathroom sinks ▪ build rock textured handholds for sport climbing walls ▪ build furniture ▪ build pickup campers ▪ build epoxy/foam sculpture ▪ chemical resistant pumps for environmental clean up ▪ build horse carriages ▪ seal electrical connections and motor windings ▪ encapsulating prototype circuit boards for brake systems ▪ build showers for RV's ▪ build millimeter wave antennas ▪ build sleds ▪ build very large format cameras ▪ build industrial ductwork ▪ simulate water in model railroad scenes ▪ build metal detectors ▪ bond lead lining for radiation protection ▪ bond connectors to space suits ▪ build protective mats for launch pads ▪ build hardware boxes for space shuttles ▪ build prototype space station air ducts ▪ build parts for a particle physics accelerator/collider ▪cast reproductions of carved woodwork and hardware ▪ build hovercraft ▪ build wind turbine blades

Over the years, West System® epoxy has been used in many exciting and innovative marine and non-marine projects. The versatility that makes West System a valuable tool for boatbuilders also makes it a valuable resource for builders in a wide range of other fields. Our customers have used it to manufacture new products, create works of art and build vehicles of nearly every shape and purpose. West System epoxy has been to the North Pole and to outer space. These are some of the projects that illustrate the creativity and diversity of West System epoxy users and the unlimited uses of West System epoxy.

West System Inc.
P.O. Box 665
Bay City, MI 48707

WEST SYSTEM BRAND ®