002-970

Wooden Boat Restoration & Repair

A guide to restore the structure, improve the appearance, reduce the maintenance and prolong the life of wooden boats with WEST SYSTEM® Brand epoxy

Contents

1 Introduction 1
Assess the feasibility of restoration or repair with WEST SYSTEM epoxy

2 Inspecting and Evaluating 2
Analyze the structure for loss of stiffness, dry rot damage, and repair strategies

3 Repairing Localized Dry Rot 3
Repair small areas damaged by dry rot

4 Repairing the Structural Framework 4
Repair or replace damaged frames, beams, stems, sheer clamps and keels

5 Repairing Hull and Deck Planking 5
Repair damaged carvel, lapstrake, plywood and molded veneer planking

6 Installing Hardware 6
Install hardware to increase load-carrying capacity and eliminate deck leaks

7 Protecting and Maintaining Wooden Boats 7
Applying protective coatings for finishing and preserving wooden boats

8 Using WEST SYSTEM epoxy 8
Use WEST SYSTEM products safely and effectively

Appendix A
WEST SYSTEM product estimating guides
Problem solving guide
Wood data
Additional reading
Index

WEST SYSTEM® BRAND

Wooden Boat Restoration & Repair

Catalog Number 002-970
6th Edition

A guide to restore the structure, improve the appearance, reduce the maintenance and prolong the life of wooden boats with WEST SYSTEM® Brand epoxy

The techniques described in this manual are based on the handling techniques and physical properties of WEST SYSTEM® Brand epoxy products. Because physical properties of resins systems and epoxy brands vary, using the techniques in this publication with coatings or adhesives other than WEST SYSTEM is not recommended.

This manual is updated as products and techniques change. If the last copyright date below is more than several years old, contact your WEST SYSTEM dealer or Gougeon Brothers, Inc. for a current version.

The information presented herein is believed to be reliable as of publication date, but we cannot guarantee its accuracy in light of possible new discoveries. Because Gougeon Brothers, Inc. cannot control the use of WEST SYSTEM Brand products in customer possession, we do not make any warranty of merchantability or any warranty of fitness for a particular use or purpose. In no event shall Gougeon Brothers, Inc. be liable for incidental or consequential damages.

WEST SYSTEM and Gougeon Brothers are registered trademarks; and Microlight and Episize are trademarks of Gougeon Brothers, Inc., Bay City, Michigan USA.

Copyright © September 1990, December 1992, June 1997, May 1999, September 2000, April 2003 by Gougeon Brothers, Inc. All rights reserved. No part of the contents of this book may be reproduced or transmitted in any form or by any means without the written permission of the publisher.

Published by Gougeon Brothers, Inc., PO Box 908, Bay City, MI 48707 USA.

Printed 4/03

Cover photo sequence—Restoration of the 1922 gaff-rigged sloop, *REEB* by Chris Maples.

Table of Contents

1 Introduction

1.1 Assessing the feasibility of repair and restoration 2

1.2 Why wooden boats fail 4

1.3 WEST SYSTEM epoxy for wooden boat repair 5

1.4 Key steps in repair and restoration 6

2 Inspecting and Evaluating

2.1 Understanding the Structure 8

2.2 Inspecting and locating damaged areas 11

3 Repairing Localized Dry Rot

2.1 Excavate and fill 13

2.2 Drilling and filling 15

2.3 Reinforcing 16

4 Repairing the Structural Framework

3.1 Laminating beams, frames and stems 17

3.2 Removal and replacement of frames 19

3.3 Removing and replacing a damaged section 20

3.4 Installing sister frames or doublers 21

3.5 Joint repairs 22

3.6 Repairing garboards 22

3.7 Keel repair 25

5 Repairing Hull and Deck Planking

4.1 Carvel planked hulls and laid plank decks 27

4.2 Lapstrake Planked Hulls 32

4.3 Plywood hulls and decks 33

4.4 Molded or laminated veneer repairs 37

4.5 Installing a teak veneer deck 41

6 Installing Hardware

6.1 Fastener bonding 43
6.2 Hardware bonding 43
6.3 Casting epoxy bases for hardware. 45
6.4 Bonding studs 46
6.5 Removable hardware. 47
6.6 Removing bonded hardware 47

7 Protecting and Maintaining Wooden Boats

6.1 Sunlight and protective coatings 48
6.2 Applying the final epoxy coatings 50
6.3 Clear finish coatings 51
6.4 Paint 52
6.5 Repairing dings and cracks 54
6.6 Ventilation for longevity 54

8 Using WEST SYSTEM® Epoxy

8.1 Epoxy safety. 55
8.2 Epoxy products 56
8.3 Handling epoxy 59
8.4 Basic techniques. 63

Appendix

WEST SYSTEM product estimating guides. 72
Problem solving guide 73
Wood data 75
Additional reading 77
Index 78

1 Introduction

Since the early 1970's, epoxy has been at the forefront of a revolution in boat building. Wood has once again become the primary building material for many of today's fastest, most durable and most beautiful boats, both sail and power. Many of the techniques of wood/epoxy construction that have made modern wooden boats so successful can also be applied to the repair of older wooden boats with excellent results. *Wooden Boat Restoration & Repair* explains these techniques, drawing on years of testing and experience at Gougeon Brothers, Inc. and the experiences of many individual builders. The manual does not offer cheap, easy or quick fixes, for these are rarely satisfactory. However, it does offer reliable and thorough information for restoration and repair, ranging from reinstalling a cleat to rebonding the entire boat.

The technical staff at Gougeon Brothers, Inc. have been helping customers with boat repair and restoration problems since the epoxy revolution began. Whenever we talk to someone about a project, we begin by asking the same basic questions:

- ✓ What type of construction is the boat?
- ✓ What condition is the boat in?
- ✓ How will the boat be used?
- ✓ What results are you looking for? A quick repair, a complete restoration or something in between?
- ✓ Are you prepared to commit the time and resources to get the results you're looking for?
- ✓ Is wood/epoxy construction the best solution to your problem?
- ✓ How can wood/epoxy construction be used effectively for your repair?

Depending on the answers to these questions, we try to help the customer formulate a reasonable plan of action and determine how wood/epoxy construction and WEST SYSTEM products might be used. Some of the questions are relatively easy—How was the boat built? What are the boat's problem areas? Other questions may be more difficult to define—what is your commitment to repairing the boat? Naturally, the larger the boat, the greater the damage or more thorough the restoration, the more important this question becomes. *Wooden Boat Restoration & Repair* is set up to help you answer the above questions for yourself. You owe it to yourself and the project not to shortchange the process but to consider each question carefully. Only when you have reasonable answers to all the questions should the real job of repairing or restoring begin. A careful analysis of these questions and perhaps a review of the manual and what a repair will involve can also help you decide whether or not to buy a particular older wooden boat in need of repair.

Using the manual

Wooden Boat Restoration & Repair approaches a repair project in several phases.

Section 1 provides guidelines for assessing the feasibility of repair and restoration, provides an overview of problems typically encountered in wooden boats and explains the major uses of epoxy in repair.

Section 2 discusses how you can evaluate the soundness of your boat's structure and locate damaged areas.

Sections 3, 4, 5 and 6 provide detailed procedures for the most common types of repairs. These sections can be used in whatever order your repair requires.

Section 7 discusses how to protect against UV, finish and maintain wooden boats.

Section 8 provides fundamental techniques for using WEST SYSTEM epoxy products successfully in wooden boat repairs, including surface preparation, bonding, bonding with fillets, laminating, fairing, applying woven cloth and tape, final coating and finishing. Particularly if you have not used WEST SYSTEM products before, it is important to read this section carefully before beginning any of the repairs discussed in previous sections.

Following the procedures described in *Wooden Boat Restoration & Repair* will allow you to restore the primary functions of the boat's structure, reduce flexing and provide moisture protection. They will assure thorough, long-lasting repairs for boats or other wooden structures.

1.1 Assessing the feasibility of repair and restoration

The repair methods in this manual offer practical solutions to structural problems in wooden boats that are within the abilities of the amateur. However, before embarking on a major rebuilding operation, it is important to evaluate your commitment carefully and determine your approach to repair and the time and money you are prepared to allocate to the project.

1.1.1 Distinguish between repair and restoration

Do you want your boat faithfully restored, repaired to function and look good, or patched and in the water as quickly as possible?

Repair means to fix broken parts, to patch holes resulting from impact or moisture damage, to strengthen weak spots or tighten loose parts. If your goal is repair, you do not need to commit yourself to a consistent repair method. You can fix one part with epoxy and another part another way. However, you need to consider the effects of a repair on the overall structure. For example, bonding a plank in place with epoxy could cause high local stiffness in an otherwise flexible structure. In some cases, it may be better to repair the boat in the same fashion in which it was built rather than use different bonding and construction techniques.

Restoration means to bring a boat back to its original (or better than original) condition. To restore a boat successfully you need to develop an overall approach to renovation and maintain consistency in reconstruction methods. Any restoration is a major project that will involve much time, dedication and careful planning.

You need to decide the level of repair that suits you and your boat. Theoretically, no boat is beyond restoration; realistically, you need to evaluate thoroughly the soundness of the structure and the time and expense needed for repair. If you have limited experience with rebuilding, we advise hiring a surveyor before getting heavily involved.

1.1.2 Determine your commitment

Consider these factors when determining your commitment to repair or restore:

Time and resources

Many people have become romantically involved with restoration projects and have failed to make their dreams a reality. Others have started projects which required far greater financial and time commitments that they were able to allocate and have been forced to abandon the project. You need to carefully assess the money and the time that you have available and can afford to commit. Consider, for example, whether you can restore specific areas of your craft each year, spreading the work and expense over time. Do you have adequate space and equipment for the project?

Historical value

If you have a very old boat that you are considering restoring, investigate its background to see if it has historical or collector's value. If you have an Adirondack guideboat, an old wood and canvas canoe, a Herreshoff, a Rushton or some other historically significant boat, wholesale repairs with epoxy may not be appropriate. You owe it to yourself and the boat to do some research into the boat's value.

Condition of the boat

Obviously, the worse the condition of the boat, the more work needed to repair it. While in theory no boat is beyond restoration, you should probably think about looking for another boat if less than 60 percent of the boat is salvageable.

Size of the craft

Reconstruction difficulty increases with boat size. This is because larger craft experience higher loads. Boat timbers are proportional to boat size and epoxy is usually just on a surface or perimeter. This means epoxy strengths and effects can be overwhelmed by proportionately larger wood mass effects. Dimensional changes can be the result of moisture passage or temperature cycling as well as stresses from boat use. Also larger craft may have more areas that are difficult or impossible to access.

Construction method

You need to understand the construction method originally used to build the boat and the level of difficulty involved with repair of different construction methods. The following provides a general guide to the logistical and practical ease of reconstructing craft built using different construction methods, with the easiest listed first:

Plywood (soft and hard chine)
Strip plank
Laminated (hot and cold molded)
Lapstrake
Carvel (single)
Carvel (double)

If you have little experience with boat repair, reading the rest of this manual can give you some sense of the work involved in particular projects. You will also need to make a thorough evaluation of the boat's structure as described in Section 2 or hire a surveyor. Try to talk to others who have undertaken similar projects. Understanding your own level of commitment to the project and developing a realistic plan for repair and restoration are necessary for your project to succeed.

1.2 Why wooden boats fail

The nature of wood and the techniques required to build boats in the past have contributed to both the beauty and the misfortune of wooden boats. The amount of work necessary to maintain wooden boats tarnished their appeal, and lack of maintenance resulted in many beautiful wooden boats being devoured by the elements. Wooden boats may vary widely in age and condition, but most suffer in some degree from two common problems.

1.2.1 Loss of stiffness

Much of the appeal of wooden boats lies in the boatbuilder's skill in joining many individually crafted pieces of wood into a single structure and loss of the original stiffness is a major cause of a boat's deterioration. The forces acting on a boat during normal use put each joint under a continual strain. For example, when a wave or swell passes under a boat, it lifts the hull unevenly. Waves supporting the hull under the ends force the sides of the hull apart; a wave supporting the hull in the middle forces the sides together. Waves or swells crossing at an angle can lift the bow in one direction and the stern in another, causing a twist that pulls one side of the hull and deck forward and the other side aft. Other loads come from lifting the boat for storage, adding cargo and stressing the rigging under sail. Thus, a boat is under a constant state of twisting, stretching and flexing. All of the joints must resist this flexing to keep the structure rigid and watertight.

The smallest movement around a fastener can weaken the fastener's holding power, leading to more flexibility. Over time, every exterior joint that can flex is a potential source of moisture penetration. Traditional caulking methods are intended to flex and absorb the movement between adjoining pieces, but with the continual flexing, these caulking materials will eventually break down. Without regular maintenance, the caulked joints will leak. Then, high moisture content of the wood around the joint leads to loss of wood strength (see Appendix–Wood data, page 75), loss of fastener holding power, more flexibility and even more moisture penetration.

An often repeated misconception about wooden boats suggests that it is their nature to be flexible, and that flexibility is desirable because it contributes to the "soft ride" that makes wooden boats appealing. But, as those who race boats know, a flexible boat absorbs power. It is harder to push through the water than a stiff boat and for the reasons stated above it is not as durable. A stiff hull is faster, more efficient, and more durable in the long run. A soft ride is better achieved with a good hull design. The flexible approach implies that a wooden boat is at its best just before it falls apart.

1.2.2 Dry rot

Dry rot is another cause of wooden boat damage. It is a natural decay process caused by the growth of brown rot, a type of fungus that feeds on the cellulose in wood fiber. Along with severe loss of strength, dry rot causes the wood to discolor, crack across the grain and shrink.

Dry rot is a misleading term, since wood must be damp for the fungus to exist. In fact, all of these four conditions must be present for the fungus to survive:

- ✓ **FOOD**—an adequate supply of wood fiber
- ✓ **MOISTURE**—moisture content of the wood at or near the fiber saturation point (above 20%)
- ✓ **OXYGEN**
- ✓ **WARMTH**—76° to 86°F (24° to 30°C) is ideal for rot growth (rot can be active in temperatures as low as 50°F)

The many joints in a wooden boat are potentially ideal environments for dry rot. Wherever wood contacts wood, air circulation and evaporation will be reduced. If a leak occurs, the moisture level of the wood at a joint can easily reach the fiber saturation level and still allow enough oxygen for rot growth. Wood preservatives attempt to control rot by poisoning the food supply. This approach has had only limited success and does nothing to address the problem of loss of wood strength due to high moisture content.

1.3 WEST SYSTEM epoxy for wooden boat repair

The properties of WEST SYSTEM epoxy that make it valuable for new boat construction also make it ideal for repairing older boats. The techniques in this manual are designed to take maximum advantage of epoxy's properties within the limits of an existing older structure.

WEST SYSTEM epoxy is a structural marine adhesive, formulated to bond to wood.

Epoxy is used in the construction of new wooden boats that are both lightweight and very rigid. Bonding joints with epoxy provides greater bonding area than mechanical fasteners and totally seals and protects joints from moisture. Joints bonded with WEST SYSTEM epoxy are often stronger than the wood being bonded. Bonding with epoxy requires little clamping pressure, with staples and screws often used to hold the pieces together until the epoxy cures. As an adhesive, WEST SYSTEM epoxy is ideal for repairing existing damage and reducing flexing in the structure.

WEST SYSTEM epoxy is unequaled as a moisture barrier.

Epoxy's ability to protect wood structures from water has made modern wooden boats nearly immune to dry rot. To a degree, this protection can be applied to older wooden boats by keeping the moisture content below the point where dry rot can survive.

WEST SYSTEM epoxy has excellent gap-filling qualities.

This eliminates the need for precise fits and a lot of clamping pressure.

WEST SYSTEM epoxy is easy to use and versatile.

WEST SYSTEM products include a complete line of epoxy materials and supplies developed to meet a wide range of building and maintenance needs. Both amateurs and professionals can tailor the epoxy system to meet the specific needs of the project.

WEST SYSTEM epoxy and repair information is backed by over thirty years of experience.

Gougeon Brothers, Inc. has been manufacturing WEST SYSTEM epoxy since 1969 and has earned a reputation for excellence in formulating practical, long-lasting and affordable epoxies for marine construction. New sail and power boats constructed with WEST SYSTEM products have dominated many classes of competition and families are cruising throughout the world in seaworthy craft built, restored or maintained with WEST SYSTEM epoxy. Gougeon Brothers, Inc. has the construction experience, research and testing, and qualified technical staff to answer specific repair questions and provide expert guidance to those using WEST SYSTEM products.

1.4 Key steps in repair and restoration

The three key steps in formulating a plan for the use of epoxy in the repair or restoration of wooden boats are:

Bonding for stiffness

Coating for moisture protection

Ventilating for longevity

1.4.1 Bonding for stiffness

The issue of stiffness is fundamental in our thinking about epoxy in marine structures. As mentioned, the loss of stiffness in the original structure is one of the problems leading to the boat's deterioration. When you use epoxy to repair or restore a boat, you are introducing stiffness into the structure. If you are planning an overall restoration of the boat, the comprehensive use of epoxy as the adhesive and moisture coating will give you a very stiff and durable structure.

What if you are not planning a total rebuild, but are interested in large or small local repairs to a basically sound boat? Bonding and encapsulating wood with epoxy can greatly increase the local or the overall stiffness of a boat. Most of the time this stiffness if beneficial. Occasionally, if the job is not well planned, the newly introduced stiffness can have a detrimental effect, usually in the form of stress concentration, on the durability of the repairs or the integrity of the original boat.

First, identify the structural unit that you want to repair and how it fits in the overall boat structure. Look for structural units where the newly introduced stiffness will not work against the original structure. Many times this approach can help you set limits to the repair job. We suggest that you look for the logical breakdowns in the structure. Scarfing a plank, rebuilding a hatch, replacing the transom, replacing a frame, rebuilding the top of a deck house, replacing all of the deck—all of these are possibilities. Edge-bonding the hull planking with epoxy after cleaning the seams is the single best thing you can do.

1.4.2 Coating for moisture protection

Encapsulating offers a valuable advantage to new wooden boats by forming a continuous moisture barrier over every part of the boat, inside and out. By coating every surface of every piece of wood in the boat with at least two coats of epoxy, the moisture content of each piece remains at a constant level far below the fiber saturation level and the structure is dimensionally stable. Encapsulating is easy to accomplish while building a new boat because every piece can be coated at the most convenient point before or after it is bonded in place. Especially important is being able to coat pieces or surfaces that can no longer be reached once the structure is assembled.

Encapsulating an older or conventionally built boat is not possible unless all of the surfaces, especially the contact surfaces of joints, can be coated. This would involve

disassembling the boat, piece by piece, and bonding it back together. You'll have to decide if your boat is worth this much effort. However, even if you cannot encapsulate the entire boat, you can look for structural units that might be encapsulated. You might be able to encapsulate some areas by removing and bonding one piece at a time

"Can I coat the inside of my boat with epoxy?" is a question often asked. In most cases, you are better off not coating the interior. Just to coat as many surfaces of the interior as you can reach leaves many uncoated surfaces and is not the same as encapsulating since it does not ensure a continuous unbroken moisture barrier and will not eliminate joint movement or prevent moisture from entering a joint. Failing to coat the inaccessible contact surfaces of joints can create ideal environments for dry rot if there is a leak. So keeping the interior well ventilated is often a better solution than attempting to coat areas that may trap moisture. The object is always to deny at least one of the four conditions necessary for rot to survive, in this case keeping the wood moisture content below the saturation point. If you can't guarantee keeping water out of the structure, the next best option is to guarantee that it is not trapped in.

What about coating the exterior of the hull? If you eliminate movement between the hull planks by bonding them together, coating the exterior of the hull is a good idea. When the framing is sound, edge-bonding the planking, coating the exterior and ventilating the interior is a good intermediate repair. It adds a lot of stiffness to the structure, eliminates a source of moisture entering the boat and, when the boat is properly ventilated, does not trap moisture in the boat.

1.4.3 Ventilating for longevity

Ventilation is the key to the continued longevity of your boat. No boat is maintenance-free. Either you consider preventive maintenance or you accept periodic rebuilding and repair. All boats—wood, fiberglass, aluminum and steel—need good ventilation. Keeping the boat's interior as dry as possible is the best preventive maintenance for preserving the structure and making the boat more comfortable.

Clean bilges, an open interior layout, watertight deck openings and effective ventilators all work together to provide good ventilation. If you have questions about options, we suggest you consult the books on boatbuilding, outfitting and storing your boat listed in Appendix–Additional reading, page 77.

2 Inspecting and Evaluating

To evaluate the condition of your boat you need to answer the first two questions listed in Section 1:

What type of construction is the boat?

What condition is the boat in?

Understanding how your boat was built can help you assess the damage that has occurred. A knowledge of the structure will make you alert to less obvious damage and aid you in determining whether the damage has compromised the integrity of the boat. To assess the condition of your boat you will need to inspect it thoroughly. This probably will involve some dismantling.

2.1 Understanding the Structure

Evaluating the soundness of your boat involves recognizing how well the individual and combined structural components are still doing their job. Most wooden boats are characterized by a structural framework covered with a protective skin.

2.1.1 The structural framework

While they may vary in size, shape and function, most wooden boats have common structural elements *(Figure 2-1)*. The elements form the overall framework and work together with the planking to carry loads. The heavier framework of conventionally planked boats is designed to provide most of the structure's stiffness. During the building, after the boat is launched or when she is hauled for service, the various structural members carry and distribute the concentrated and heavy loads of the boat. More contemporary boats with plywood skins may have less or lighter framework. Look at each of the elements of your boat's structure to see whether it still has the strength to carry the load it was designed to carry.

The **keel** is the backbone of most boats. Traditionally the heaviest, most rigid element in the structure, it provides a foundation for the rest of the structure. Like all components, the keel should not only be strong enough to resist bending but also solid enough to hold the fasteners that transfer loads from adjoining parts.

Frames and **floor timbers** run athwartships at regular intervals along the keel. The symmetrical frames give the hull shape while the floors distribute the loads from the ballast keel or engine stringers out over even more of the planking.

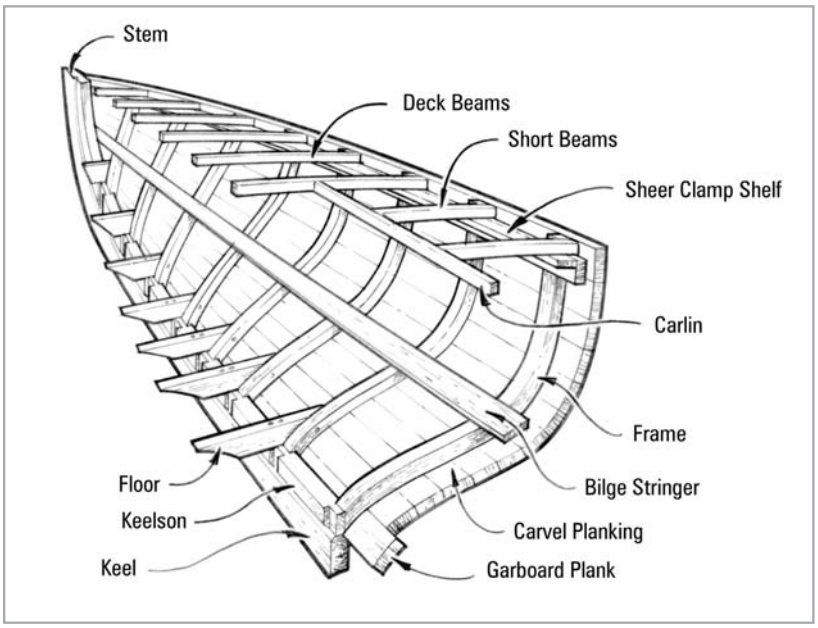

Figure 2-1 *Typical structural framework.*

Deck beams connect the tops of each pair of hull frames. Collectively they tie the two halves of the hull together, preventing the hull from spreading or collapsing and supporting the deck skin. The end of each beam rests on and is connected to the sheer clamp and is usually connected to a frame end as well.

The **sheer clamp** is connected to both the beams and the frame ends. It ties all the frame ends and beams together along the top of each side of the hull (the sheer) from stem to transom.

On larger boats a **shelf**, attached to the sheer clamp on the flat, helps to support the beams and stiffen the sheer. The clamp sits vertically against the frame ends and the shelf lies horizontally under the end of the beam. The shelf and sheer clamp are connected at approximately right angles.

Some round bottom boats may have intermediate **bilge stringers** providing additional stiffness along the turn of the bilge. These stringers, running fore-and-aft, are located halfway between the keel and the sheer clamp. On flat-bottom, multi-chine, or v-bottom boats, the intermediate fore and aft stringers are called **chines** or chine-logs. These structural members can be quite light in certain types of construction but can be very heavy, equaling the size of keel or clamp, in some traditional boats.

On powerboats and large sailboats the **engine beds** or stringers can be very large. Typically they will run some distance fore-and-aft of the engine and be tied into the floors of special bulkheads.

On some larger boats there will be **knees** or strapping installed beneath the planking and decking to resist diagonal or torsional movement. These additional reinforcing members can be wood or metal.

At cockpit or cabin openings a **carlin** ties the ends of the short or half beams to a full beam at each end of the opening. Extra knees and tie rods help to stiffen the sheer and transfer the load to the next full length beam. In a small open boat the sheer must be stiff enough to resist flexing without the aid of deck beams. In a canoe, for example, one or two thwarts replace a deck and the sheer must be stiff enough to resist flexing between the thwarts.

2.1.2 The skin

One of two basic types of skins covers the hull and deck structure, providing a watertight membrane. Variations of planking provided the only alternatives for covering wooden structures for thousands of years until modern adhesives made the plywood skin more common and more durable.

Planking

Planking, whether carvel or lapstrake or a variation of these, is more susceptible to flexing and leaks than plywood. The individual planks run generally parallel to the centerline of the boat *(Figure 2-2)*. They rely on fasteners at each framing member and the caulking to resist shear movement (the slight sliding movement between planks when a hull twists). In lapstrake planking, where each plank overlaps the preceding one, clinch fasteners or screws along the lap serve to tighten the lap and resist shear along the lap. Joints between carvel planks were traditionally sealed with cotton and/or oakum caulking driven into the seams with a caulking iron and filled over with tar or flexible sealant. Driving the caulking into the seams helped to stiffen the boat initially, but caulking needed to be redone as the boat's fasteners worked and the planking swelled or shrank.

Double planking was usually two layers of carvel, or square seam planking, sealed between seams and layers with shellac, paint, bedding compounds or glue. Occasionally canvas, bedded in paint or white lead, would be used between the planking layers.

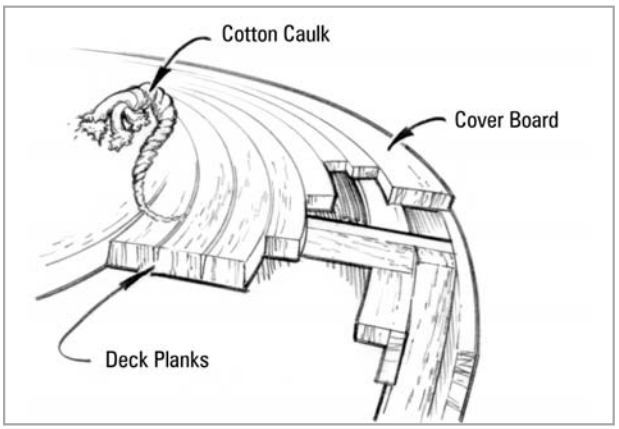

Figure 2-2 *Typical laid plank deck and carvel planked hull.*

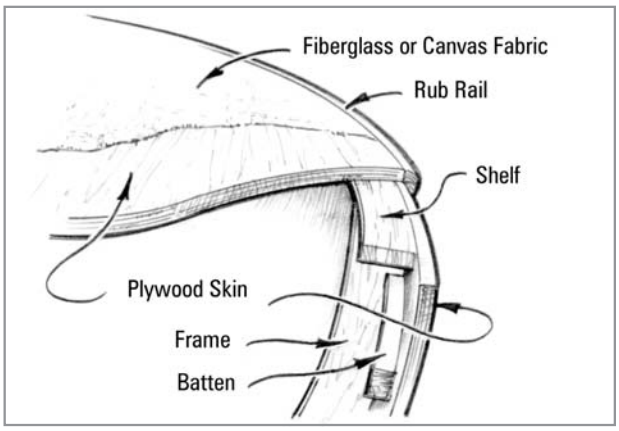

Figure 2-3 *Typical plywood construction.*

Plywood

Plywood often replaces the many individual planks, greatly reducing the number of joints that are potential sources for leaks. The framework for a plywood skin is similar to the framework for planking. But, because the plywood is strong in more than one direction, the framework for plywood covered structures can be much lighter. The extra frames required in a planked structure to resist diagonal movement can be eliminated. The plywood sheets are usually glued to the framework and held in place with staples, nails or wood screws *(Figure 2-3)*. Multiple layers of thinner plywood are used on surfaces with compound curves where a single thick layer can't bend enough in both directions.

Plywood can also suffer from moisture problems. Moisture can penetrate plywood through the end grain at seams, causing delamination. On the surface, moisture causes the top veneer to check. Early plywood decks were protected with canvas laid in a fresh coat of paint or canvas cement. The fabric may have offered some protection, but

because moisture can be trapped under a large area of the fabric, serious damage can be done before it's discovered. When you notice the soft deck or the loose fabric, the plywood may have already lost much of its strength.

Hardware

Besides the problems of joints in the deck itself, deck hardware is a major source of deck leaks and moisture damage. All deck hardware is anchored to the deck with mechanical fasteners that penetrate the skin. Lightly loaded hardware may be simply screwed into the skin. Hardware items that take high loads need to be screwed or bolted through the skin into a structural member (e.g., a deck beam or extra blocking) that can transfer the load over a larger area. If all the mounting holes are not drilled precisely, the fasteners holding the hardware in place will not share the load equally. The hole with the most highly loaded fastener elongates as the hardware is stressed repeatedly. Movement reduces the load-carrying capacity of the wood fiber surrounding the fastener and creates an entry point for water. Bedding compounds, designed to seal out moisture between the hardware base and the deck surface, do nothing to prevent movement of the hardware. Over time, this movement will break down the bedding material and eventually allow moisture into the fastener hole. Moisture can quickly penetrate the end grain of the hole, weakening the fastener's grip even further.

This overview of a boat's structure highlights some of the problems you are likely to face as a wooden boat owner. While these problems may be daunting, they don't have to be fatal. One of the beauties of wood is its resilience. With a little resuscitation and the proper protection, your boat can begin a long and low maintenance second life.

If you would like a more thorough discussion of boat structure, consult the books listed in Appendix–Additional reading, page 77.

2.2 Inspecting and locating damaged areas

The first phase of repair involves inspecting and locating damaged areas. Even though damage may be obvious, finding all the hidden damage will probably require some dismantling. Because hidden damage from trapped moisture is a major problem with wooden boats, a thorough job of dismantling is important. A careful inspection will allow you to make better decisions about what repair procedures to follow as well as let you know just how big a job you are in for.

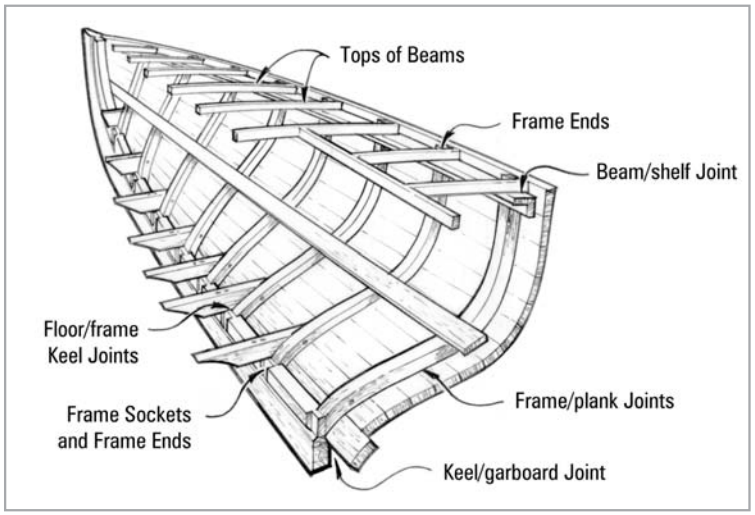

Figure 2-4 *Look for dry rot at joints and areas of standing water and poor air circulation.*

Begin your inspection as follows:

1. Support the boat in its proper shape. Stem and transom centerlines should be plumb. The sheers should be level at each station. Brace or shim the hull to prevent any movement before the repair is complete. The more parts that are bonded with epoxy, the more rigid the final structure will be. When the repairs are complete, the boat will retain the shape in which it was supported.
2. Remove equipment, hardware and accessories, canvas covering, trim and fiberglass cloth if it is loose.
3. Find the sources of leaks and the areas affected by leaks before the boat dries out. Look for damp areas, peeling paint, soft or discolored wood. Remove the old finish as necessary to judge the condition of the wood underneath.
4. Inspect each structural member and its fasteners to see if they can still carry their intended load. Use an ice pick or other sharp tool to probe for areas of dry rot. Look for rot in areas of poor air circulation, where parts contact each other and around fasteners. If the damage is from an impact or fatigue, look for cracked frames or loose fasteners away from the obviously damaged area *(Figure 2-4)*.
5. Remove damaged material and parts that block access to suspected damage. As necessary, dismantle the skin and underlying structure in reverse order of construction until all of the damage is removed or accessible. Carefully remove and save salvageable parts for reassembly. Some parts, although damaged beyond repair, may still serve as patterns for fashioning a replacement. Removing the damage does not necessarily mean removing the entire part. Often a part can be repaired in place by scarfing in a new section or adding reinforcing (see Section 4.3).
6. Dry the boat thoroughly before beginning repairs. Remove all the remaining old finish and provide plenty of ventilation to speed the drying process. The wood moisture content should equilibrate at 8%–12%. The structure will then be dimensionally stable, the epoxy will bond better and the moisture won't be sealed in. Provide a dry, sheltered work area for the boat and yourself.

Reassess the project

Once you've completed your inspection, you'll know exactly what condition your boat is in and will be better able to plan your repair. We urge you to again consider the questions posed in Section 1:

- ✓ What results are you looking for? A quick repair, a complete restoration or something in between?
- ✓ Are you prepared to commit the time and resources to get the results you're looking for?
- ✓ Is wood/epoxy construction the best solution to your problem?

When you are clear on your answers to these questions, you are ready to proceed on your repair or restoration and use the following sections of this manual as appropriate. Section 8 provides fundamental techniques for using WEST SYSTEM epoxy products successfully in wooden boat repairs. Even if you are familiar with these products, it is important to make sure you thoroughly understand the basic techniques for surface preparation, bonding, bonding with fillets, laminating, fairing, and applying woven cloth and tape which are discussed in Section 8. Sections 3–7 of the manual provide detailed procedures for particular types of repair and can be used in whatever order your repair requires.

3 Repairing Localized Dry Rot

Repairing small areas of dry rot may be the most common repair to wooden boats. Most structures have many small, isolated areas with poor ventilation that can trap moisture and harbor dry rot. These pockets of dry rot often can be repaired in place by excavating the damage and filling the cavity.

3.1 Excavate and fill

Remove all wood noticeably damaged by rot, making sure to extend well away on both sides of the apparent damage. Use a chisel to excavate all of the weak, crumbly wood, leaving a clean cavity with solid wood exposed on all sides *(Figure 3-1)*. Use a wire brush to remove any remaining soft wood around the cavity. The size of the exposed cavity will determine which of two filling methods is the most appropriate. You can fill small cavities with solid thickened epoxy and fill larger cavities by bonding in a dutchman (wood shaped to fill the cavity).

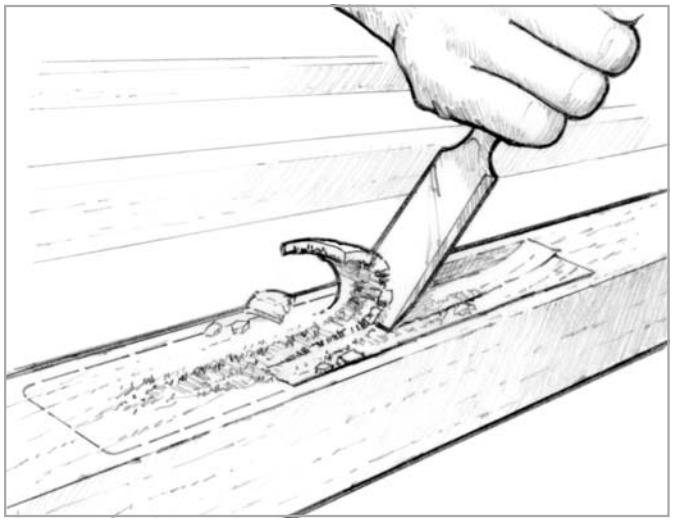

Figure 3-1 *Use a chisel to excavate a cavity that extends beyond all of the damaged wood.*

The decision to fill the cavity with solid epoxy or with wood is based on convenience, practicality and economics. You can save a lot of time if you can avoid carving intricate pieces of wood to fit hard to reach areas, but a solid epoxy patch weighs more and costs more per pound than wood. Also, you are limited by the epoxy's exothermic reaction to about a ½" layer (using 205 hardener) in one application. A larger volume would heat up enough to cause foaming and significant weakening of the epoxy. Although you may use slower hardener and/or apply the epoxy in multiple layers to avoid exotherm, there are practical limits to the size of cavity that can be filled with solid epoxy.

3.1.1 Filling with epoxy

Small cavities are most conveniently filled with solid thickened epoxy as follows:

1. Prepare the surface (Section 8.4.1). Be sure the area is thoroughly dry.
2. Wet out the repair area with the resin/hardener mixture (see Two-step bonding, page 65).
3. Fill the cavity with epoxy thickened with a high-density (406,404 or 403) filler to a peanut butter consistency. Trowel the mixture into the void with a plastic spreader or mixing stick *(Figure 3-2)*. Smooth the mixture flush with the surface and remove any excess before the mixture begins to cure.
4. Allow the mixture to cure thoroughly before sanding.

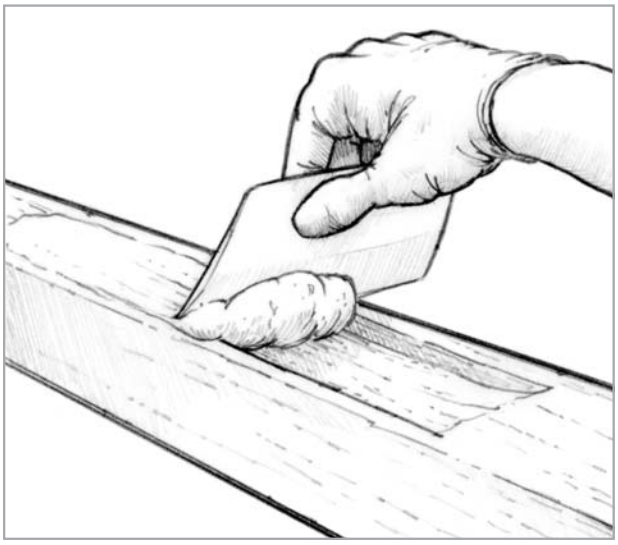

Figure 3-2 *Trowel thickened epoxy into smaller voids.*

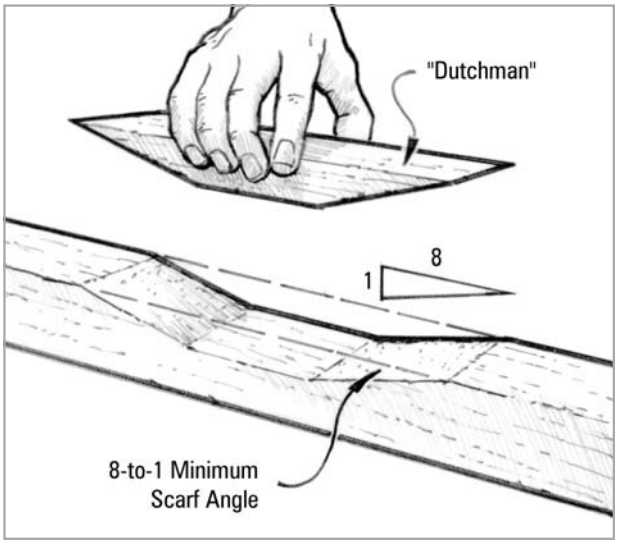

Figure 3-3 *Bond a dutchman into larger cavities. Bevel the sides of the cavity and the dutchman to match.*

3.1.2 Filling with wood

Dutchman—A small piece of wood shaped to closely fill the void in a larger piece of wood.

Larger cavities should be filled with wood wherever possible. This method restores the original strength of the wood. The procedure involves carving a *dutchman* to the shape of the void and bonding it in place with epoxy as follows:

1. Prepare the dutchman. Use the same kind of wood if possible. Carve the cavity to a geometric shape if necessary to make shaping the plug easier. Bevel the sides of the cavity. The longer the bevel on the sides running across the grain, the stronger the repair *(Figure 3-3)*. An 8-to-1 bevel (8" long for every 1" deep) or greater will be close to the original strength of the wood. Check the dutchman for fit. Thickened epoxy will fill a fairly large gap, so the fit doesn't have to be perfect. Prepare the surfaces for bonding (Section 8.4.1).
2. Wet out the bonding surfaces of the cavity and the plug with resin/hardener mixture.
3. Apply thickened epoxy/adhesive filler (406, 404 or 403) (mayonnaise consistency) to the cavity surfaces. Using the mixing stick, apply enough of the thickened mixture to fill any gaps.
4. Insert the plug into position. Thickened epoxy should squeeze out of the joint.
5. Clamp the plug into position. Weights or staples may be used to hold the plug until the epoxy cures. Remove excess epoxy before it begins to cure.
6. Allow to cure thoroughly before removing clamps or sanding.

3.2 Drilling and filling

A common, but much less effective, method of dealing with rotted areas is to drill a pattern of holes in the affected area and inject epoxy into the holes to penetrate and stabilize the area. This is a last resort method, especially if wood strength is critical. The biggest problem with this method is that you can never be sure of the extent of epoxy penetration into the damaged wood. Testing of the physical properties of repaired samples shows drilling and filling to be inferior to excavating and filling. Also, drilling and filling is impossible on overhead surfaces and difficult on vertical surfaces. However, it may be useful in some situations, where maximum strength is not required or the rotted area is too difficult to reach for excavating and filling. If you choose this method, we recommend the following procedure:

1. Drill a pattern of 3⁄16" diameter holes over the rotted area. Space the holes 1" or less from center to center in all directions. Drill each hole deep enough to pass through the rot, just into solid wood. On vertical surfaces, drill the holes downward at approximately 45°.
2. Dry the area thoroughly. If necessary, use heat guns or fans to accelerate drying.
3. Inject or pour resin/hardener mixture into the holes. Epoxy penetration can be improved by first warming the wood with a heat gun. On contact with the warmed wood, epoxy will become thinner and penetrate more deeply into the exposed end grain. A mixture using 206 Slow Hardener should penetrate more deeply than 205 hardener before it begins to gel *(Figure 3-4)*.

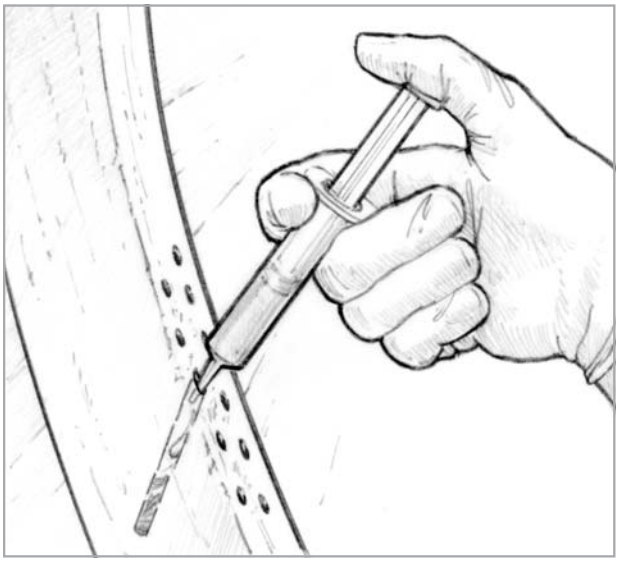

Figure 3-4 *Inject resin/hardener mixture into holes until the damaged wood absorbs all it can.*

Figure 3-5 *Fill the remaining voids with fairing compound.*

4. Continue to add epoxy to the holes until the wood is saturated and can no longer absorb more.
5. Fill remaining voids with thickened epoxy after the epoxy reaches its initial cure, if desired*(Figure 3-5)*. Use an epoxy/fairing filler mixture for cosmetic fairing of the surface (see Section 8.4.4).

3.2.1 Thinning epoxy

There are epoxy-based products specifically designed to penetrate and reinforce rotted wood. These products, basically an epoxy thinned with solvents, do a good job of penetrating wood. But the solvents compromise the strength and moisture barrier properties of the epoxy. We are often asked if WEST SYSTEM epoxy can be thinned with solvents for greater penetration. The answer is yes, but not without the same compromise in strength and moisture resistance. Laquer thinner, Acetone, and denatured alcohol have been used to thin WEST SYSTEM epoxy, duplicating these penetrating epoxies with about the same effectiveness.

If you chose to thin the epoxy, keep in mind that the strength and moisture protection of the epoxy are lost in proportion to the amount of solvent added. Adding 5% laquer thinner results in a 60% reduction in viscosity. It also reduces epoxy's compressive strength by 35%.

There is a better solution to get good penetration without losing strength or moisture resistance. We recommend moderate heating of the repair area with a heat gun or heat lamp (to about 115°F—still comfortable to touch). The epoxy will have a lower viscosity and penetrate more deeply when it is warmed by contact with the warmed wood cavities and pores. In addition, heat will expand air in the wood pores causing it to out-gas. When the heat is the removed, the cooling wood will draw epoxy back in. Slower hardeners (206, 207, 209) will have a longer working life and should penetrate more than 205 Hardener before they begin to gel. When the epoxy cures it will retain all of its strength and effectiveness as a moisture barrier, which we feel more than offsets any advantages gained by adding solvents to the epoxy.

3.3 Reinforcing

Tensile strength can be added to a dry rot repair area by using synthetic fiber such as fiberglass, carbon fiber or Kevlar® in appropriate amounts with epoxy. Refer to Section 8.4.5 for application information. Apply the reinforcing after the dry rot has been excavated and filled, or drilled and filled.

Stainless steel threaded rod has also been used to reinforce and join pieces with excellent results. The rod can be bonded into drilled or grooved pieces as a structural pin to tie individual or separate pieces together. See Section 6.4 for information on bonding threaded rod.

4 Repairing the Structural Framework

Replace or reinforce in place framework that is too weak to carry its designed load. Structural framework includes the keel, stems, hull frames, stringers, deck beams, sheer clamps, shelves, knees, carlins or thwarts. They vary widely in size, shape and position, but have many problems and repair techniques in common.

Frames can be damaged from dry rot or from impact. Under impact, frames often break in multiples. If you find a cracked frame, take the time to look for others, especially adjacent to the broken one. Hull frames often break at stringer edges, the turn of the bilge and at the reverse turn (especially in the stern). Examine the outside of the hull for a knuckle or unfair spot in the planking in the area where the frames are damaged. If you find planks that are out of position, temporarily force the affected planks (and frames) back using whatever means are available. You may use bracing and shims on the outside of the hull and/or rope and tackle on the inside. The frame repair can begin once the shape of the hull is restored.

Frame repairs rely on replacing damaged frames or sections of frames with material that is of equal or greater strength (see Appendix–Wood data, page 75). Laminating is an efficient method of building frames and a basic technique for the frame repairs in this Section.

4.1 Laminating beams, frames and stems

Frames can be cut from solid stock or steam bent if you plan to restore the structure exactly. (If you steam bend frames, be sure to allow plenty of time for the frame to dry out before bonding.) However, laminated frames have many advantages over steam bent frames, both structurally and in ease of fabrication. Whole and partial frames are made of multiple thin layers of wood to duplicate the shape and dimension of the damaged frame (Sections 4.2, 4.3 and 4.4). There are no limitations to the size of frame that can be laminated. Laminating may be the only practical or economical way to duplicate large structural members as large timber becomes more scarce. The new frame can be laminated in a simple jig made from a pattern or, in some cases, directly in place in the hull.

Keep in mind the following when selecting wood for laminating frames:

1. Choose wood strips that are the same or similar species as the original frame.
2. Use wood strips thin enough to bend easily into the shape of the original frame. Be sure all of the strips collectively can bend to shape. When fewer, thicker strips are used for a given thickness of frame, more stress is induced resulting in less strength and more

springback in the curved frame. Using more, thinner strips results in a curved frame with greater strength and less springback, but requires more labor and epoxy to build. Use thinner strips especially with harder woods like white oak.

3. Use full-length strips. Make the strips longer than the finished frame to allow for trimming.
4. The new frame width should be the same as the original frame. Strips can be wider to allow for trimming and finishing after the frame is laid up.
5. Select wood strips that are seasoned. Ideal moisture content is 6% to 14%.

4.1.1 Laminating in a jig

A laminating jig will allow you to laminate a new frame in the controlled environment of your shop. Use cardboard or other convenient material to pattern the top or bottom line of the damaged frame. Transfer the pattern line to a laminating jig of one the types illustrated *(Figure 4-1)*.

Laminate frames in a jig as follows:

1. Prepare the jig and the strips as suggested. Go through a dry run to be sure the strips bend enough and that your jig and clamps can handle the bending of all of the strips. Cover the jig with plastic to prevent the frame from bonding to the jig.
2. Wet out the strips on both sides with epoxy, except for the outer faces of the top and bottom strip.

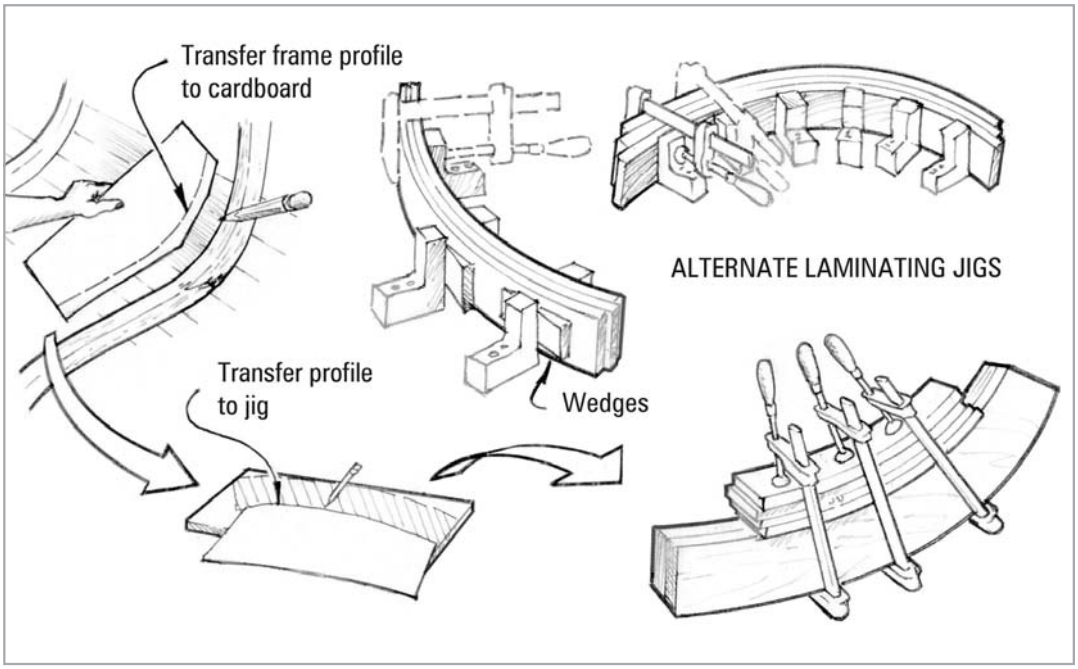

Figure 4-1 *Transfer the desired frame shape to the jig.*

3. Apply thickened epoxy to one side of each strip and stack it in place on the jig against the previously coated strip. Thicken the mixture with 406 filler to a catsup consistency. Be sure one side coated with thickened epoxy faces each joint.
4. Clamp the strips to the jig until the epoxy cures *(Figure 4-2)*. Use clamps, wedges, staples or small nails to apply enough pressure to squeeze a small amount of epoxy from each joint.

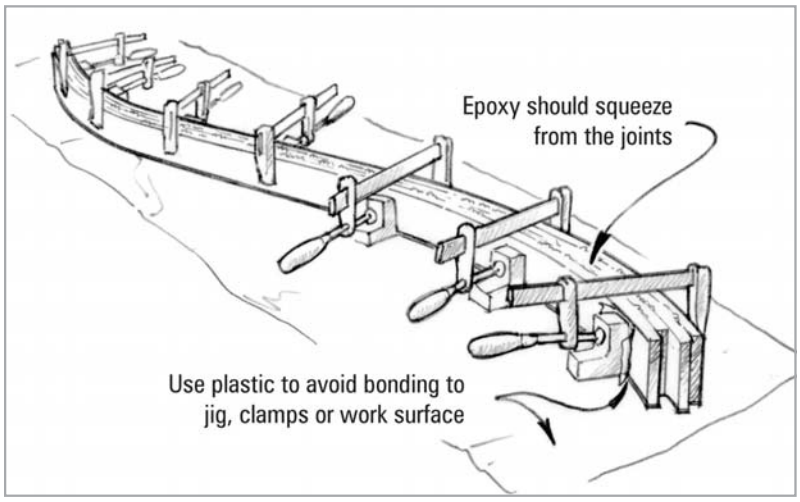

Figure 4-2 *Clamp the appropriate number of coated strips into the jig. Trim the frame to size after the epoxy is fully cured.*

5. Remove the frame from the jig after the epoxy has thoroughly cured. Be sure to allow extra cure time if the temperature is cool, especially if you expect a lot of springback. Trim the frame to its final shape and finish as desired.

4.1.2 Laminating frames in place

The new frame or frame section can, in some cases, be laminated directly in place in the hull. The existing structure can be used as the laminating jig in one of the following ways:

A) Bond all of the strips permanently to the structure in one continuous operation, either one at a time or all at the same time, depending on the best available clamping method. Use non-corroding screws or staples to bond strips in place one at a time, if temporary clamping is not feasible. Try a dry run to see which method will work best. Trim all of the strips to size before bonding.

B) Bond all of the strips together in place with plastic over the hull contact area to prevent immediate bonding to the hull. Remove the laid up frame and trim to size. Bond the new frame back into place permanently, as previously described.

4.2 Removal and replacement of frames

Often a framing member is too damaged to be repaired and replacement is the best option. Replace a damaged frame as follows:

1. Support the hull and remaining structure before removing frames. If necessary, leave some damaged frames to maintain the shape, replacing them after new frames are installed. Remove all fasteners holding the frame. Cut the damaged frames into sections, if necessary, to remove them.
2. Laminate the replacement frame using the instructions in Section 4.1.1. You may also cut or steam bend a frame to match the original if you choose. Trim the frame to fit.
3. Prepare the frame and contact area for bonding. Avoid bonding to anything you intend to remove later.
4. Install the frame. Wet out all contact areas with epoxy. Apply a thickened epoxy/406 mixture to one side of each contact area.

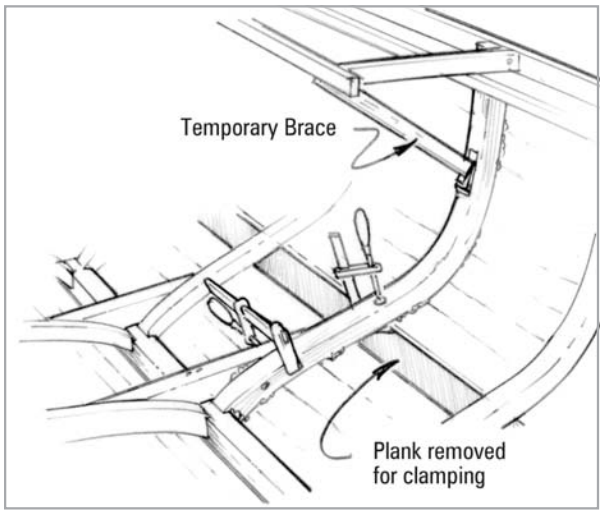

Figure 4-3 *Install the new frame in the same position as the old frame. Braces or screws may be used to hold the frame until the epoxy cures.*

5. Clamp the frame in position until the epoxy cures. If the fasteners of the old frame are to be reused, bond the fasteners with epoxy.

4.3 Removing and replacing a damaged section

Often damage to a frame is limited to a small section or the frame may be too difficult to remove. You may be able to replace only the damaged portion, restoring the strength of the frame while leaving the frame in position in the boat.

1. Cut out the damaged section of the existing frame. Trim the exposed ends to a minimum 8-to-1 scarf angle *(Figure 4-4)*. The longer the scarf angle, the stronger the joint. When repairing hardwood or highly loaded frames, use a longer (12-to-1) scarf angle.

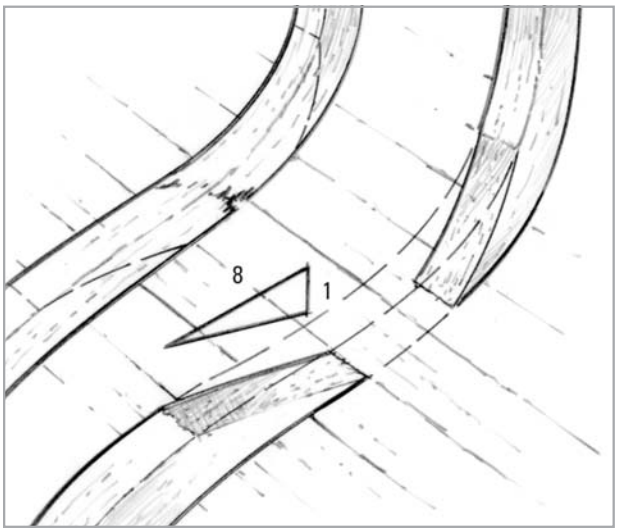

Figure 4-4 *Cut out all of the damaged area, leaving at least an 8-to-1 bevel on the ends of the damaged frame.*

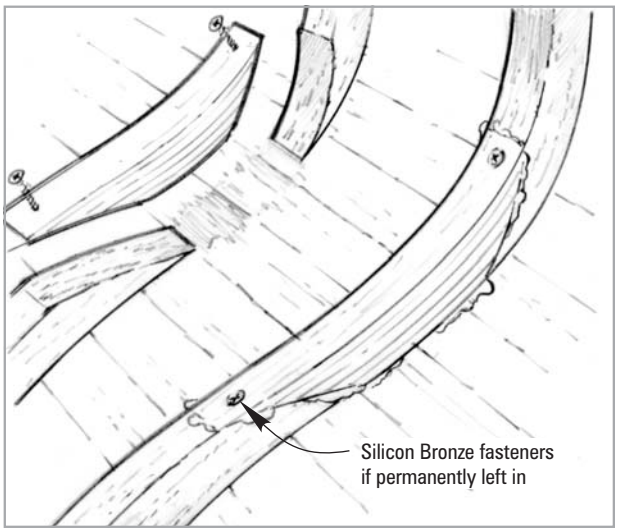

Figure 4-5 *Bond in a new laminated or solid section trimmed to fill the void in the existing frame.*

2. Laminate a new piece slightly larger than the removed section, or carve a new section out of solid wood, using the same wood as the existing frame. Trim the new section to fit the size and shape of the void in the existing frame. Cut a matching scarf angle on each end of the frame section.
3. Prepare the surfaces for bonding. Trim the new piece and existing frame ends as necessary for a good fit.
4. Install the new frame section *(Figure 4-5)*. Wet out all contact surfaces of the new and existing frame ends. Apply a liberal amount of thickened epoxy/406 mixture to one side of each contact area.
5. Clamp the section in position. Clean up excess epoxy before it cures. Remove clamps after epoxy cures thoroughly.

4.4 Installing sister frames or doublers

Sister frames are bonded alongside a damaged frame to restore the strength of the original frame. This method may not look as good as a replaced frame but it will save time, especially if the damaged frame is difficult to remove. Install sister frames as follows:

1. Laminate a full sister frame slightly longer than the existing frame and trim it to fit tight against the damaged frame. Laminate a partial sister frame so that it will extend past each end of the damaged area twelve times the thickness of the frame *(Frame 4-6)*. A sister frame may also be carved out of solid wood. Use the same wood as the existing frame.

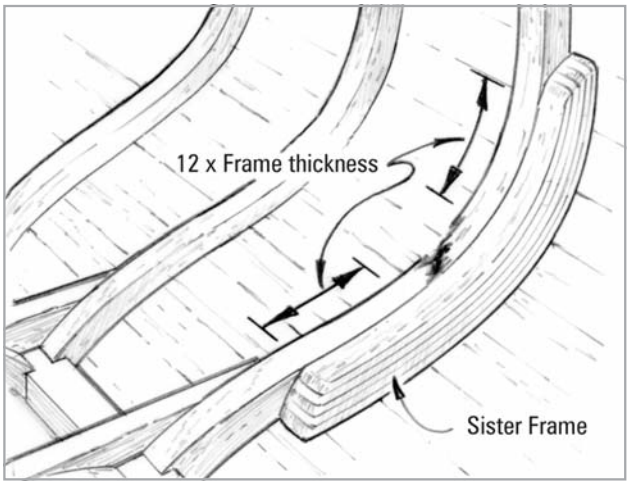

Figure 4-6 *Laminate a partial sister frame longer than the damaged area.*

2. Prepare the contact areas of both frames and the skin for bonding. Avoid bonding to the planking or plywood if it will later be removed.
3. Install the new frame section. Wet out all contact surfaces of the new and existing frames. Apply a liberal amount of thickened epoxy/406 mixture to one side of each contact area.
4. Clamp the section in position. Clean up excess epoxy before it begins to cure. Remove clamps after epoxy cures thoroughly.

4.5 Joint repairs

If the framing is not damaged from rot or impact, you may still want to bond the framing together to stiffen the structure and seal the joints against moisture. Remove as many frames as you can and bond them in place using the standard bonding techniques in Section 8.4.2. Many of the frames that can't be removed can still be bonded into place as follows:

1. Support the boat in its proper shape before bonding any joints.
2. Open as many of the joints as you can reach, between frames and between frames and the outer skin. Loosen fasteners wherever possible. A small pry bar or wedge may be used to force the joint open temporarily. Use a saw blade or other sharp tool to scrape out old paint, varnish or dirt from the joints *(Figure 4-7)*. Clean the inner joint surfaces to bare wood as much as possible.

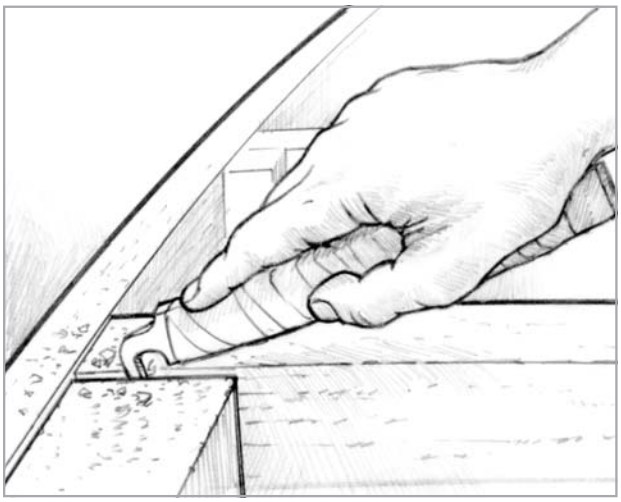

Figure 4-7 *Use a scraping tool to clean out and abrade the inner joint surfaces.*

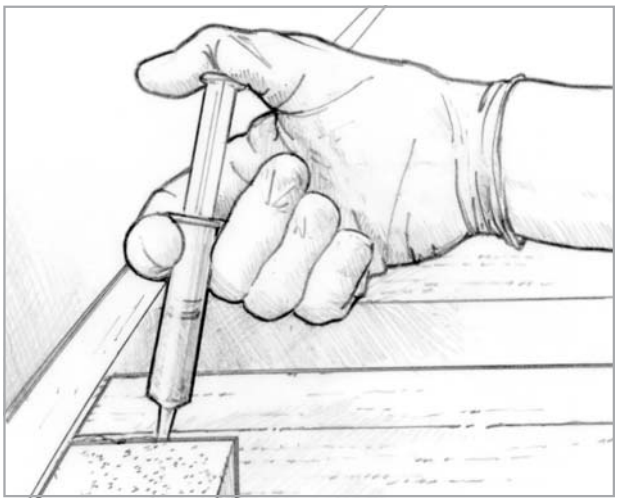

Figured 4-8 *Inject epoxy as far as possible into the joint.*

3. Wet out the inner contact areas of the joint. Use a syringe, small brush or pipe cleaner to reach the middle of the joint.
4. Apply thickened epoxy to the contact area of the joint. Use a syringe to inject an epoxy/406 filler mixture to the middle of the joint *(Figure 4-8)*. A small plastic tube or straw taped to the spout of the syringe will extend the reach of the syringe into a tight area. Inject enough of the thickened mixture so that a small amount will squeeze out when the joint is clamped together.
5. Clamp pieces in position until the epoxy cures. Tighten fasteners to draw the joint closed. Fasteners may be bonded in place for moisture protection and added strength (see Section 6).

4.6 Repairing garboards

The garboard is the plank which meets the keel or deadwood. It sometimes separates from the keel, allowing water to leak into the boat. If this leak recurs season after season even after the seams are thoroughly caulked, you may have a serious problem to

attend to. The wood keel may be pulling away from the floors (the wood timbers that tie the frames into the keel) or the floors may no longer be tied effectively to the frames.

To check for this:

A. Inspect the area where the floors attach to the frames. Look for signs of movement between the floors and the frames *(Figure 4-9)*.

B. Inspect the area where the floors attach to the keel. Look for a gap between the floors and keel.

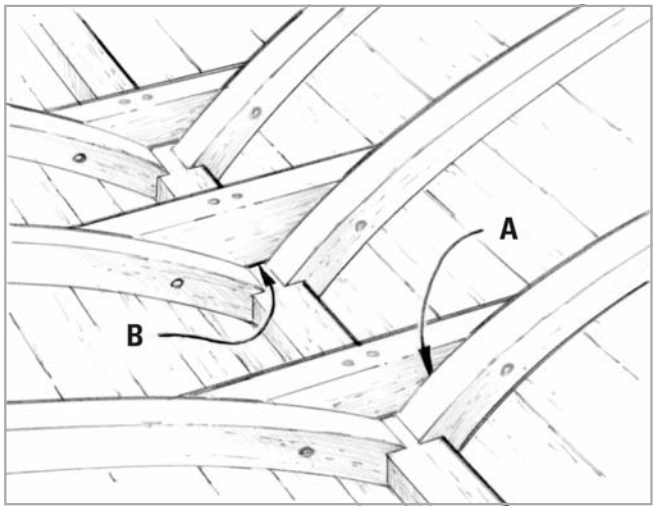

Figure 4-9 *Inspect the floors, keel and frames for gaps or signs of movement.*

4.6.1 Repairing floors

If gaps exist between the frame and floors or the floors and the keel, they will cause the garboard seam to open. The following repair procedures will correct the problem and permanently attach the floors to the frames and keel:

1. Remove the garboards and one or two additional planks from each side of the hull.
2. Prepare the keel, floors, and frames. Remove old paint or varnish and sand to bare wood. Dry the area thoroughly.
3. Cut new floors to fit opposite the old floors on the opposite side of the frames. They may be laminated or cut from solid stock.
4. Cut filler blocks that fit between the frames and between the new and old floors.
5. Bond the new floors and blocking to the keel and frames *(Figure 4-10)*. Wet out all mating surfaces and end grain with resin/hardener mixture. Apply thickened epoxy/406 filler. Clamp in position until epoxy cures. Allow the epoxy to cure thoroughly before removing clamps and proceeding with the next step.
6. Drill two vertical holes at each hull frame, through the blocking and at least 3" into the keel. The diameter of the holes should be ⅛" larger than the threaded rods selected for this repair.
7. Cut a piece of stainless or hot dipped galvanized threaded rod to match the depth of each hole. The threaded rod should be the same diameter as the original keel bolts.
8. Wet out one or two holes at a time with unthickened resin/hardener mixture. Allow the epoxy to penetrate the end grain inside the hole.

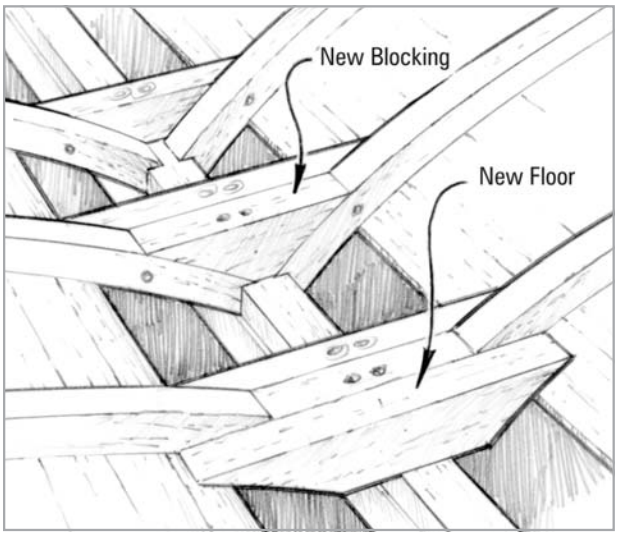

Figure 4-10 *Bond new floors and blocking to the keels and frames.*

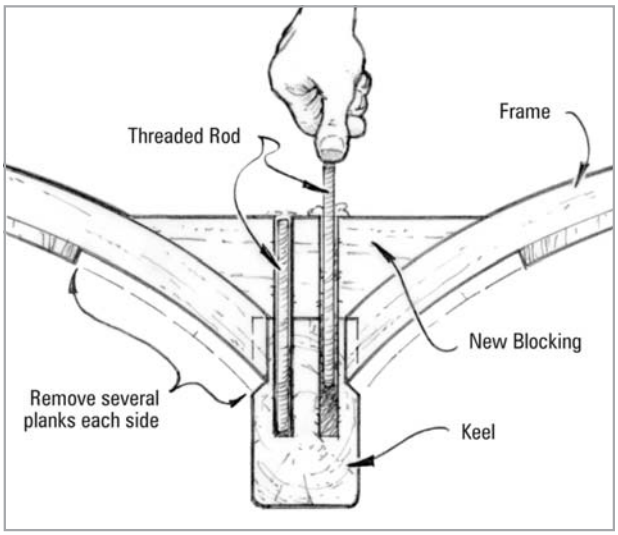

Figure 4-11 *Bond threaded rod through the blocking and at least 3" into the keel.*

9. Fill the wet-out holes half full of thickened epoxy/404 or 406 filler. Apply thickened epoxy to the threaded rod, filling the threads.
10. Push the coated rod to the bottom of the filled hole *(Figure 4-11)*. Fill the holes to the top as necessary. Clean up excess epoxy before it cures.

4.6.2 Reinstalling garboards

The keel, floors and frames are now permanently tied together with epoxy and threaded rods. With this completed, bond the planking removed earlier to the keel and frames:

1. Prepare the planking and frames for bonding. Remove all old paint or varnish. Sand the areas to be bonded to expose new wood fiber.
2. Dry fit the planks to the hull. Drill new holes for screws if the old ones don't align. Be sure you have enough clamps to draw the planks to the frames.

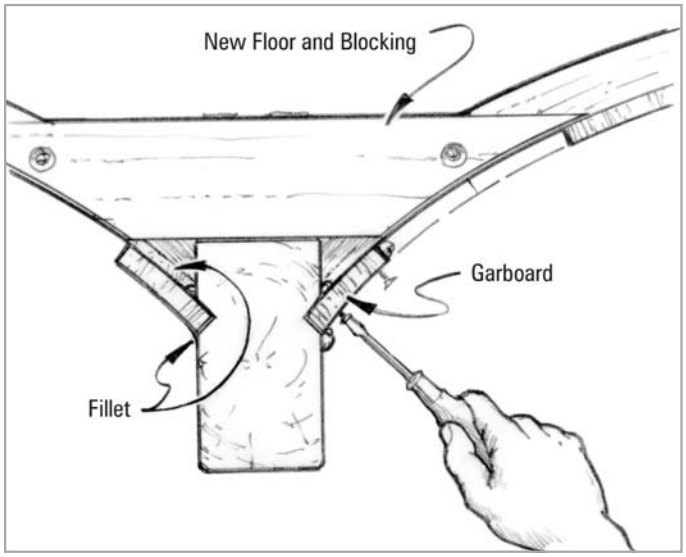

Figure 4-12 *Bond the garboard back into position next to the keel.*

3. Wet out the screw holes (new and old) in the planks, frames and keel with resin/hardener mixture, using a pipe cleaner or syringe. Wet out the edges and inside surface of the plank and the bonding areas of the keel and frames with resin/hardener mixture.
4. Apply liberal amounts of thickened epoxy/406 filler to the mating surfaces of the keel and frames.
5. Install the garboard with the original screws *(Figure 4-12)*. Start at the middle and work toward both ends.
6. Form a fillet along the keel/garboard joint with the excess epoxy and form a fillet where the planking meets the frames.
7. Follow the same procedure and install the garboard on the opposite side of the keel.
8. Bond the remaining planks together, following procedures discussed in Section 5.

4.7 Keel repair

A keel is a major structural component and should get extra care and special investigation. Skegs, deadwood or fin keels can pose special problems. Deadwood can be inside or outside the planking line and typically has a fair number of exposed seams. It is generally not wise to encase the skeg or deadwood in a fiberglass/epoxy skin unless you have stabilized the joints in the structure.

Worm damage may require replacement of the specific pieces.

If work is needed on the garboards, floors or frame heels, it is a good idea to examine the keel while the garboards are off. The joints and rabbets are prime locations for rot to start. These joints between the pieces of the deadwood or skegs are notorious places for leaks. The keel bolts or drifts passing from the ballast keel up through the deadwood, keel and floors allow water to pass up and into the hull.

Follow these procedures to repair the keel:

1. Remove the paint or any other coatings or coverings and allow the hull to dry out thoroughly (possibly schedule this work for the spring after the boat has had the winter to dry out).
2. When the seams are open or the keel or deadwood timbers have shrunken, clean out any old paint, caulking or debris. Make sure that the wood in the joints is dry.
3. Work epoxy thickened with 406 filler into the joints with a plastic spreader from one side until the epoxy comes out the other side. Clean up excess epoxy from the surface and allow the epoxy to cure.
4. Either coat the exterior of the skeg or deadwood with epoxy or cover it with a fiberglass/epoxy skin.

4.7.1 Keel bolt repair

If there has been leaking around the keel bolts, floor bolts, rudder tube or propeller shaft, follow these procedures:

1. Support and secure the boat and ballast keel.
2. Fabricate a deep engagement hole saw by first cutting the end off a hole saw of slightly larger diameter than the bolt to be repaired. Braze the hole saw teeth to the end of a pipe of the same diameter and long enough to chase the length of your longest keel bolt. Weld a piece of round stock into the other end of the pipe to serve as a bit for a drill chuck. If you have many bolts of many lengths to do, you may want to make several hole saws of different lengths *(Figure 4-13)*.

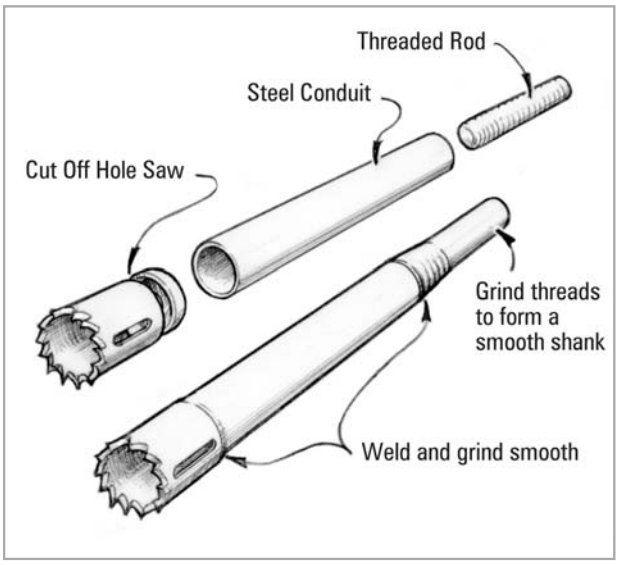

Figure 4-13 *A custom keel bolt saw can be made from a pipe section and a standard hole saw.*

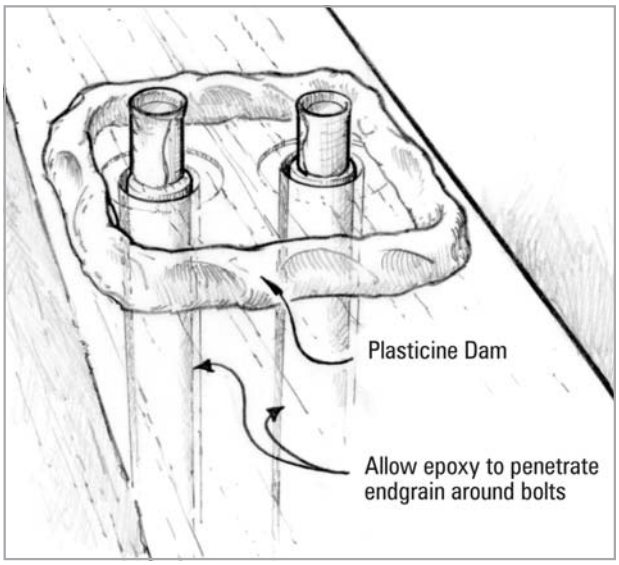

Figure 4-14 *Build an epoxy reservoir around each keel bolt.*

3. After removing the nuts, washers or clinch rings, use the hole saw to chase down along the bolt. The typical hole saw will produce a clean 0.125" annulus around the bolt. Be sure the wood is completely dry.
4. After blowing out the dust and shavings, wrap duct tape around the bolt threads and construct a ¼" high dam around the bolt hole with plasticine (modeling clay) *(Figure 4-14)*.
5. Overfill the hole with epoxy. Keep the plasticine dam full as the epoxy soaks into the end grain in the hole.
6. After the epoxy has cured, sand the surface smooth, remove the protective tape and replace the washers and nuts.
7. Call Gougeon Brothers, Inc. for more specific discussion of repairing larger keels.

5 Repairing Hull and Deck Planking

This section is a guide for the repair of the outer skin of wooden boats. The skin covering the deck and hull framework of wooden boats can generally be divided into two categories: planking and plywood. Planking is the older, traditional method of covering hulls and decks and is more susceptible to flexing and leaks than plywood. Modern adhesives have made plywood a more common and practical skin for wooden structures. The procedures in this section deal with the problems and repairs for the most common types of skins. Select the procedure or combination of procedures that best fits your situation.

5.1 Carvel planked hulls and laid plank decks

For centuries, carvel planking and laid plank decking were the only methods of enclosing a boat. Carvel planking and laid plank decking are essentially the same method, in which many individual boards are laid edge to edge, fastened to each frame and caulked. Eventually the structure loosens up, the caulking breaks down and the planking becomes a constant source for leaks and endless maintenance. While carvel hull planking and laid plank decks vary in the size and placement of the planks, they are similar in function and can be repaired with the same techniques.

As mentioned in Section 1.4.2, the ideal reconstruction would be to remove the planking, clean and strip it of paint, and bond it edge to edge and to the framing timbers. If you can do this, you can eliminate places where moisture can become trapped and could then coat both the inside and the outside of the hull with epoxy to encapsulate it. Remember, you can only encapsulate the boat with epoxy if all of the surfaces, especially the contact surfaces of joints, can be coated.

If, however, the framing is sound and you don't want to remove the planks, your best solution to leaks and loss of stiffness is to (1) clean out the seams, (2) bond the planks together with epoxy and (3) coat the exterior with epoxy and (4) ventilate the interior to reduce expansion and contraction. This seals the seams permanently and eliminates movement between planks. A strong bond between all the planks will result in a much more rigid structure.

IMPORTANT! As a rule, edge bond the planks only if you coat the exterior—coat the exterior only if you edge bond the planks.

Edge-bonding the planking and coating the exterior will stiffen the structure and reduce maintenance. Below the waterline it will also stop water penetration through the hull, help keep the interior drier and dry wood is stronger than wet wood. It will allow the boat to be dry sailed, no longer relying on the planks to swell before it is water tight. In many cases it is advisable to make this repair below the water line only. Often it is the first stage in a restoration or it may be the only improvement to an otherwise sound boat.

5.1.1 Cleaning out the seams

Getting a good clean bonding surface on each plank edge is the first step. You can use a circular saw, a router, a chisel and hammer, or a sharpened scraper to clean all the old caulking material out of the joint and expose clean fresh wood for bonding on the facing edge of each plank. One tool may work better than another in a given situation, but a circular saw is usually the most effective way to mill out the seam accurately.

1. Dry the hull thoroughly before beginning. This allows the seams to open to their widest and stabilizes the size and shape of all the pieces.
2. Tack a batten to the hull to act as a guide for the saw. The batten should be parallel to the seam so the blade will follow the center of each seam exactly.
3. Select a blade or reset the blade's teeth wide enough to shave the edges of both planks facing the seam. Use a pair of pliers to bend the teeth for more set. The seam width may vary, but the cut should be at least 3⁄16". If the seams have opened very wide after drying, two passes with the saw may be necessary to shave both planks.
4. Set the depth of the cut to 1⁄16" less than the thickness of the plank. Leave just enough material at the back of the seam to prevent epoxy from passing through to the inside.

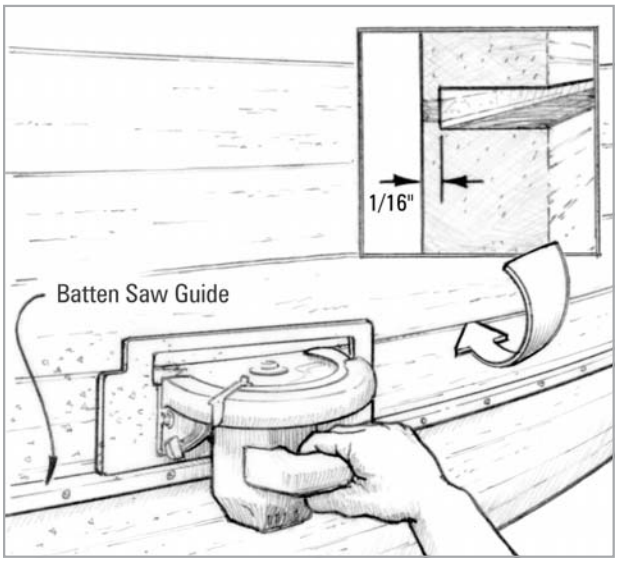

Figure 5-1 *Use a circular saw to clean out plank seams.*

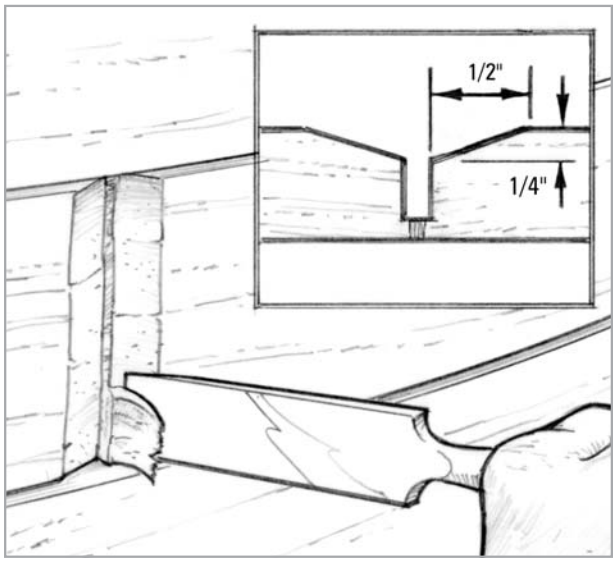

Figure 5-2 *Cut a bevel on the end of each plank.*

5. Clean out each seam by running the saw along the batten *(Figure 5-1)*. Check the depth and width of the cut. Clean out the butt joints at the ends of the plank as well. Chisel a shallow bevel on the end of the planks (¼" deep x ½" back from the edge) *(Figure 5-2)*. The bevel increases bonding area and reduces stress at the joint.

   A router with a straight fluted bit also will work to clean out seams. Select a bit wide enough to shave both planks. The router will get into tighter places than the circular saw, but the bits dull quickly, often break and are expensive to replace.

   A chisel can be used in tight spots to carve a "V" groove where a saw or router will not work. A scraping or "reefing" tool for cleaning out seams can be made from a mill file as shown in Appendix C or you may invent your own tool or method for cleaning the seams. Remember, the object is to clean out the old caulk and expose clean wood on the facing edge of each plank for good bonding.

5.1.2 Filling the seams with wood

After machining a clean gap between two planks, bond a spline of suitable wood into the gap. The spline should be of the same species or stronger than the planking. **Remember!** *Support the hull in its proper shape before bonding.* The shape of the hull will be permanently set once the planks are bonded.

1. Prepare the splines. Cut them from stock that is the same species and thickness as the planking. Rip the splines on a table saw, with the blade set at a 5° angle. Flip the stock end for end after each pass so each spline will have a 10° taper in cross section. Set the width of the cut so that the wide end of the taper is the same width as the seam gap. It should fit snugly when pushed into the gap, just as the narrow end hits the bottom of the gap. The splines can be any convenient length for easy handling. Cut a 45° scarf on the ends of each spline.

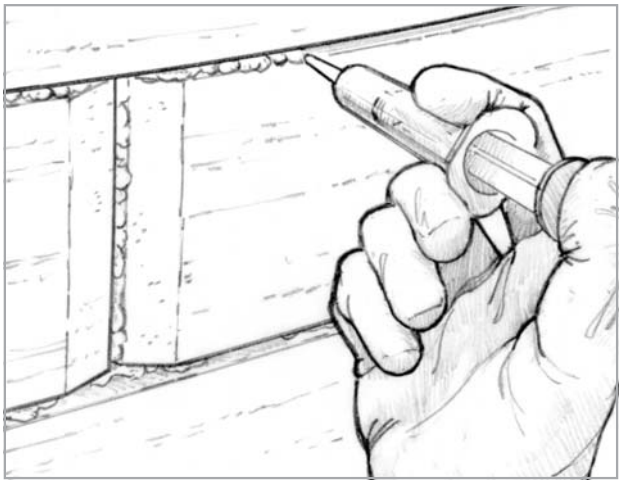

Figure 5-5 *Inject epoxy into the wet-out seam.*

2. Wet out an equal length of opened seams and splines with resin/hardener mixture. Use a glue brush or swab to wet out the seam. Use a foam roller, cut to a narrow width, to wet out the splines.
3. Apply a bead of epoxy/403 or 406 (mayonnaise consistency) in the seam. Use a syringe or an 810 Caulking Tube to fill the gap with enough epoxy so that a small amount will squeeze out when the splines are pushed in *(Figure 5-3)*.

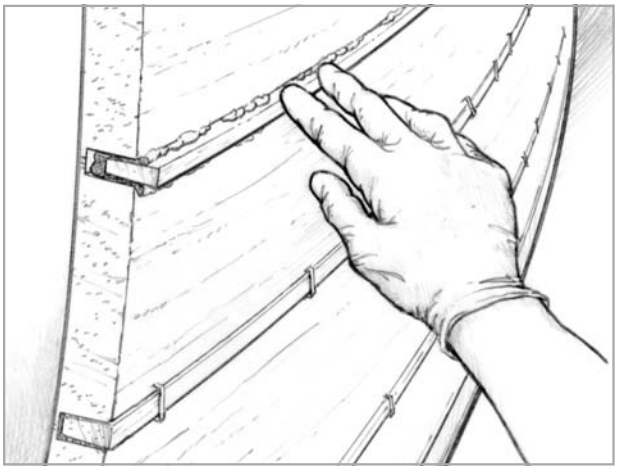

Figure 5-3 *Push the wet-out spline into the seam.*

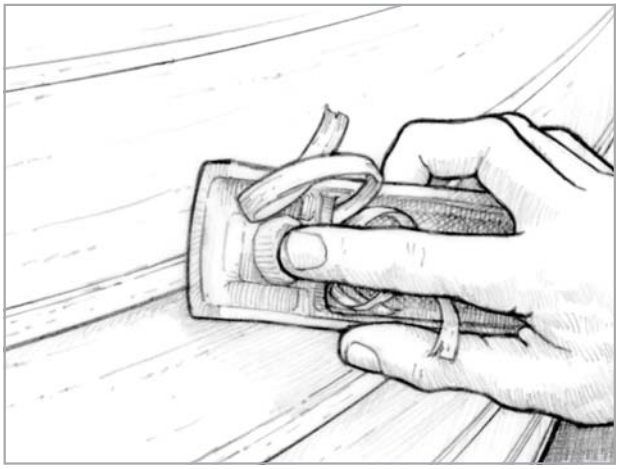

Figure 5-4 *Use a plane to remove the excess spline and a sander to fair the surface after the epoxy has cured.*

4. Push the wet-out spline into the seam *(Figure 5-4)*. The taper on the spline should force epoxy to the sides, making good contact with the spline and edges of the planks. The spline should fit snugly in the seam with hand pressure after a small amount of epoxy squeezes out of the joint. Staple the spline if necessary to hold it in position.
5. Clean up excess epoxy. Use a sharpened mixing stick to scrape up excess epoxy before it cures. Station a helper inside the boat or check the inside frequently to clean any epoxy leaking through the planking.
6. After the epoxy cures thoroughly, remove the excess portion of the spline with a plane followed by coarse sandpaper *(Figure 5-5)*. Fill the vertical seams and any remaining voids with epoxy/407 fairing compound before final fairing and finishing.
7. **Important!** Coat the exterior following the procedures in Section 7. Failure to apply an epoxy moisture barrier may cause structural damage when planks swell. Fiberglass cloth is often applied to provide additional reinforcing and abrasion resistance.

5.1.3 Filling the seams with epoxy.

A quicker but more expensive way of bonding the seams is to fill the entire gap with thickened epoxy (epoxy is more expensive than wood by volume). This method is more practical on seams that are too curved or tight for a spline.

1. Open the seam as before. The gaps do not have to be a particular width, as long as you expose fresh wood on each plank edge.
2. Wet out the gap with resin/hardener mixture.
3. Fill the seam with thickened epoxy/403 (mayonnaise consistency). (Note: 403 filler will leave an off-white colored seam, which will not matter if you plan to paint the surface. If you plan a clear finish you may want to use 405 Filleting Blend or a coloring agent mixed with the epoxy to match the planking color. See Section 7 for information on finishing.) Large syringes or caulking tubes are convenient to inject the thickened epoxy into the seams. Smooth the mixture flush with the surface and remove excess epoxy before it cures. Check the inside for leaks and clean any excess epoxy before it cures.
4. Sand the surface fair after the epoxy cures thoroughly. Fill any remaining low areas with epoxy/low-density filler mixture.
5. Coat the exterior following the procedures in Section 7.

5.1.4 Repairing damaged planks in place

If you will be repairing or replacing a lot of planks, it is best to repair individual planks and small areas completely before going on to other areas. The hull may be seriously weakened and lose its shape if you remove too many planks at one time. Scarf joints or butt joints can be used in repairing damaged sections of planks without removing the entire plank. Support the hull in its proper shape before bonding.

Scarf joint method

To repair damaged sections of planks using scarf joints:

1. Remove the damaged part of the plank using a circular saw, hand saw or chisel.
2. Bevel each end of the plank opening with an 8-to-1 scarf.
3. Cut a piece of wood to fit the opening. Match the 8-to-1 bevel on each end *(Figure 5-6)*. Make the new piece of wood slightly thicker than the original planking. Excess material inside or outside the hull can be planed off after the glue has cured.
4. Wet out the mating surfaces with resin/hardener mixture. Recoat the scarfed surfaces as necessary until the end grain is fully saturated.

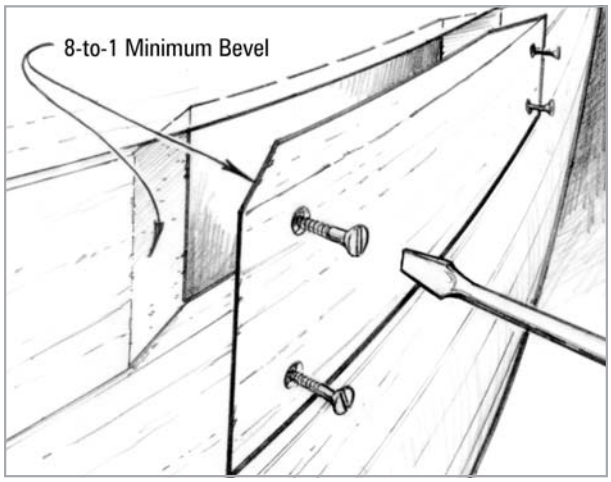

Figure 5-6 *Replace a section of plank using scarf joints.*

5. Apply thickened epoxy/403 or 406 (peanut butter consistency) to one side of each bonding area.
6. Clamp the scarfed section in place with temporary screws or staples until the epoxy has cured. Corrosion-resistant screws can be left in if the pilot holes were wet out with epoxy.
7. Remove clamps and fair the surface after the epoxy has cured thoroughly.

Butt joint method

The butt joint is an alternative to the scarf joint for repairing damaged planks in place. Although not as strong as the scarf, it is considerably easier to do. Butt joints should be staggered (adjacent planks should not end at the same place). To repair a damaged plank section using butt joints:

1. Remove the damaged portion of the plank using a circular saw, hand saw, saber saw or chisel.
2. Cut a replacement piece of wood for the opening and a piece for a backing plate *(Figure 5-7)*. A backing plate will be required behind each butt joint unless the joint falls on a frame. When the repair section falls between frames, the backing plate should run from frame to frame. When replacing longer sections of planking, a backing plate is only required at the ends.

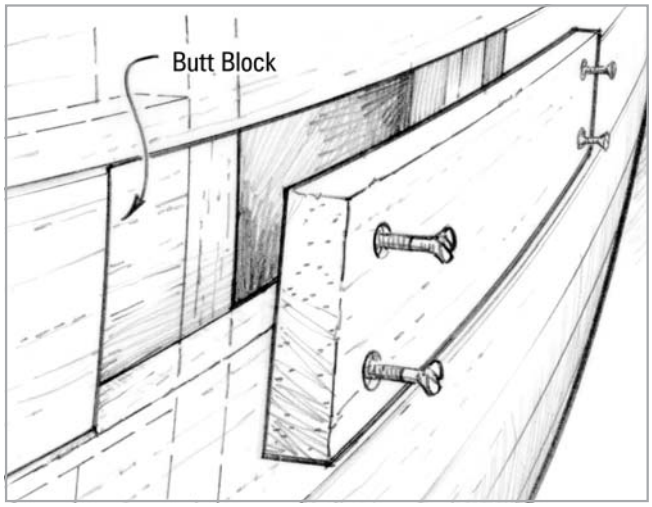

Figure 5-7 *Replace a section of plank using butt joints.*

3. Wet out all mating surfaces with resin/hardener mixture.
4. Apply thickened epoxy/403 or 406 (peanut butter consistency) to the mating surfaces (including the surface of the backing plate facing the plank).
5. Install the backing plate(s) to the back of the planking. Temporarily clamp the backer in position with screws, staples or nails.
6. Install the new plank section. Clamp the section in position with screws, staples or nails. Fill remaining openings in seams with thickened epoxy.
7. Remove clamps and fair the surface after the epoxy has cured thoroughly.

5.1.5 Double Planking

Repairs to double planked boats involve removing the outer layer of planking, repairing the inner layer following the procedures already described in Section 5.1, and then replacing the outer layer of planks. Removing both layers of planking is desirable in that it allows you to examine the planks thoroughly and seal them completely in epoxy. If you wish to coat the inside of the hull with epoxy, you need to remove both layers of planking, clean and strip them of paint, and rebond them to the framing timbers. Remember you can only encapsulate the boat with epoxy if all of the surfaces, especially the contact surfaces of joints, can be coated.

To repair double planking:.

1. Carefully label the outer layer of planking for position and remove it.
2. Decide if the planks are worth saving. If so, clean, dry, repair and sand them.
3. Remove and discard the canvas between the layers of planking.
4. Follow the procedures described in 5.1.1–5.1.4 to clean out the seams and bond the layer of planking still on the hull.
5. Bond the second layer of planking, following techniques discussed in 8.4.2. You can use screws in the old screw holes to hold the planks in place while the epoxy cures.

5.1.6 Repairing Tongue and Groove Deck Planking

The methods described previously are also applicable to tongue and groove deck planking.

1. Clean the seams to the tongue.
2. If access is possible and the tongue is loose or broken, tape the underside of the seams.
3. Force thickened epoxy\403 or 406 (mayonnaise consistency) as thoroughly into the seams as possible. This mixture, forced with a 5" wide putty knife, can flow about the tongue and groove joint and into the underside seam, thereby achieving a complete bond of the mating planks.

5.2 Lapstrake Planked Hulls

Lapstrake (or clinker), like carvel planking, is composed of a single layer of planks thin enough to bend to the shape of the hull. However, each plank (or strake) overlaps the face of the preceding plank rather than butting the edge of it. Wooden lapstrake hulls often have trouble with the lap fasteners working seams open, causing leaks. The most successful repair is to clean out the lapped seams and bond the planks together with epoxy. It will be very helpful to work on your boat upside down if it is small enough to turn over. Repair lapstrake hulls as follows:

1. Remove all paint or old finish on the outside of the hull.

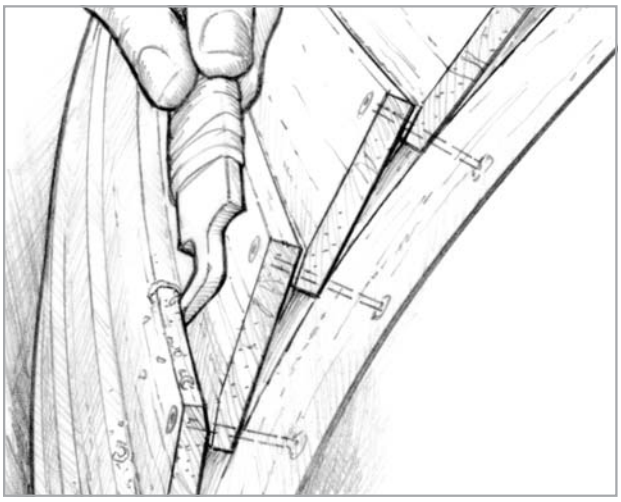

Figure 5-8 *Clean out the seams with a scraper.*

Figure 5-9 *Fill the wet-out seam with thickened epoxy*

2. Scrape the old paint and caulk out of all the seams. Use a custom scraping tool to clean out and abrade the plank mating surfaces down to bare wood *(Figure 5-8)*. A file with the tang bent and sharpened or a hacksaw blade makes an excellent seam scraper. Allow the wood to dry thoroughly if it has not already dried. Support the hull in its proper shape before beginning bonding.
3. There is typically a transition from the lap to a rabbet where the planking laps run into the stem or transom. This allows the planks to lie flush with each other and fair with the stem. When cleaning out the laps, pay attention to this transition zone. It may be necessary to remove fasteners at the ends of the planks and open them slightly to clean out the seams and the rabbets.
4. Wet out the opened seam surfaces with resin/hardener mixture. Work epoxy into the seam as deeply as possible with a disposable brush or syringe.
5. Apply thickened epoxy/403 or 406 (peanut butter consistency) into the opened seams. Use a plastic spreader to force the thickened epoxy into the seam as far as possible *(Figure 5-9)*. Check inside for epoxy leaking through the planks. Clean excess epoxy before it cures.
6. Shape the thickened epoxy at the inside corner of the seam to a square inside corner or a cove-shaped fillet. A fillet increases the bonding area around the seam and provides more protection to the edge of each plank. For more details on fillets see Section 8.4.3.
7. Sand the seams and plank surfaces fair after the epoxy has cured thoroughly. Fill and fair any remaining voids with an epoxy/low-density mixture. Follow the coating/finishing procedures in Section 7.

5.3 Plywood hulls and decks

Plywood has a high strength-to-weight ratio and makes an excellent boat building and repair material. Douglas Fir is the most common wood species used in plywood. Exterior construction grade plywood, available at lumberyards, has been used for boat building and repairs, but if the boat is going to see offshore service, we recommend a higher grade of plywood. Medium Density Overlay (MDO) is used by some boatbuilders because the resin-impregnated paper face provides a smooth base for paint and epoxy. AA marine grade is the highest quality Douglas Fir plywood for marine repairs. Mahogany plywood is the highest quality and first choice if the high costs are acceptable.

Use a syringe to fill all voids (found in lesser grades of plywood) with thickened epoxy after cutting the panel to final shape. Lesser grades of Douglas Fir plywood may require a layer of fiberglass cloth to prevent grain checking.

5.3.1 Rebuilding a plywood joint

If the seam between plywood sheets has deteriorated, you can clean out the joint, seal the edges with epoxy and reinforce the joint with fiberglass tape applied with epoxy. The seam may be on a flat surface or at an edge or chine. Rebuild a plywood joint as follows:

1. Clean out the seam by running a circular saw or scraping tool along the seam. Set the depth of the saw cut to the full thickness of the plywood when the seam runs along a frame. Set the width of the blade to shave the edges of both sheets of plywood at the joint and expose fresh wood on each edge. Remove any fasteners in the way of the cut. Be sure the wood is thoroughly dry.
2. Drive the fasteners deeper at the joint to allow for a valley to be sanded along the joint for the placement of one or more layers of fiberglass tape.
3. Sand a 4" to 5"- wide valley along the joint with a disc sander to allow the layer(s) of tape to lie below the surface. Make the depression about 1/32" deep for each layer fiberglass tape that will fill the joint. Use the sander or a chisel to remove any additional damaged or rotted plywood around the joint. At an edge or chine, use the sander or a router with a roundover bit to round the corner. A 1/4" to 3/8" radius will allow the glass tape to lie flat on the surface *(Figure 5-10)*.
4. Wet out the cleaned out seam and sanded area with resin/hardener mixture. Recoat the seam with epoxy as necessary as it is absorbed into the end grain of the plywood. Inject or work epoxy between any delaminated veneers that are still sound.
5. Apply thickened epoxy/403 or 406 (mayonnaise consistency) to the seam. Use a plastic spreader to force the thickened epoxy into the wet-out seam and smooth the excess mixture along the joint. Work the thickened mixture into any voids and between wet-out delaminated veneers.
6. Apply a layer of fiberglass tape in the depression along the joint *(Figure 5-11)*. 727 Biaxial Tape (4" wide) is ideal for this joint. Use the spreader to work epoxy into the fabric and remove the excess. Apply additional layers, if desired, in the same manner.

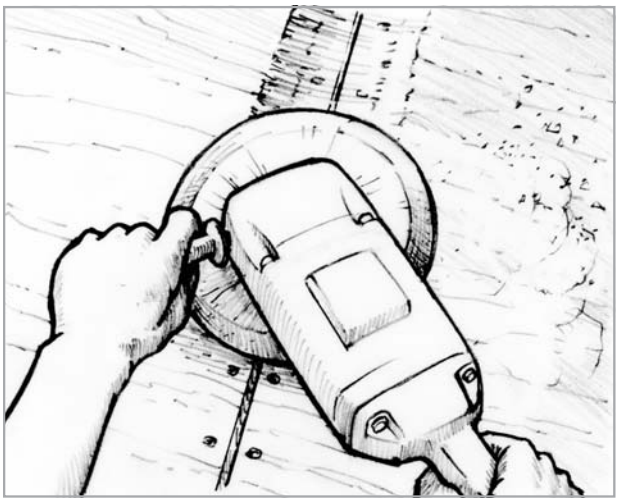

Figure 5-10 *Sand a valley along the joint to allow for fiberglass tape.*

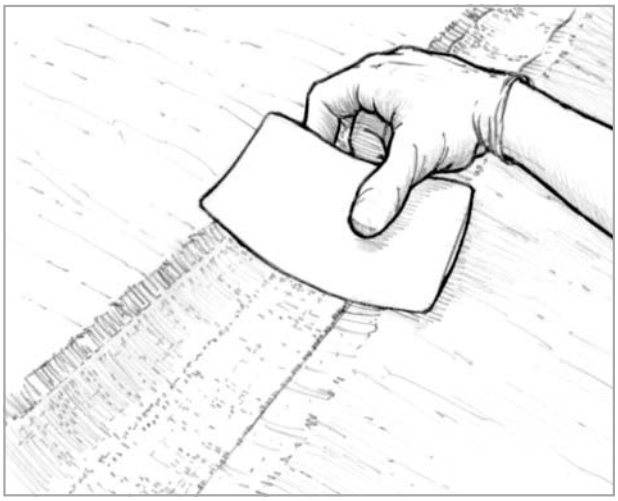

Figure 5-11 *Apply fiberglass tape over the prepared joint.*

Place new layers ½" to either side of the previous layer so the edges don't fall directly on top each other. For details on applying fiberglass cloth, see Section 8.4.5.

7. Apply thickened epoxy/407 or 410 low-density filler (peanut butter consistency) to the joint. Use a plastic spreader to trowel on and shape the thickened mixture slightly higher than the plywood surface (Section 8.4.4). Allow to cure thoroughly and sand fair.

5.3.2 Replacing damaged plywood sections.

Sections of plywood panels may suffer from impact or dry rot damage and can be repaired without replacing the whole panel. The damaged section can be cut out and a replacement section bonded in without losing any panel strength. Replace small plywood panel sections as follows:

1. Cut the damaged section out of the panel. Use a circular saw or reciprocating saw to cut the smallest square or rectangle that encloses all of the damage. Check the extent of damage on the interior of the panel.
2. Scarf or step the edges of the opening.

   a. Grind a scarf on the edges with a disc sander *(Figure 5-12)*. Grind a minimum 8-to-1 bevel back from the edges of the opening. (If the panel plywood is ½" thick, the bevel should extend at least 4" from the edge of the hole on each side.)

   b. Mill a step on the edges of the hole with a router. Use a straight fluted bit to machine a step or steps in the panel round the opening. The width of each step should be eight times the step thickness. Steps are convenient when laminating several layers of thinner plywood to equal the thickness of the damaged panel. Make each step equal to the thickness of one replacement layer.

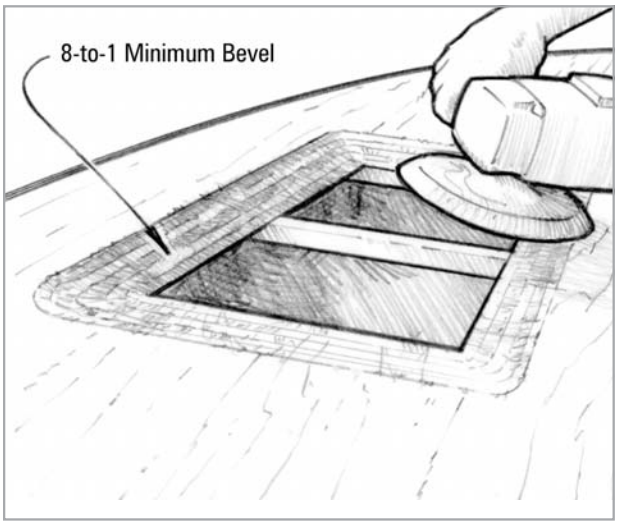

Figure 5-12 *Cut out the damaged area and grind a minimum 8-to-1 bevel on all sides of the opening.*

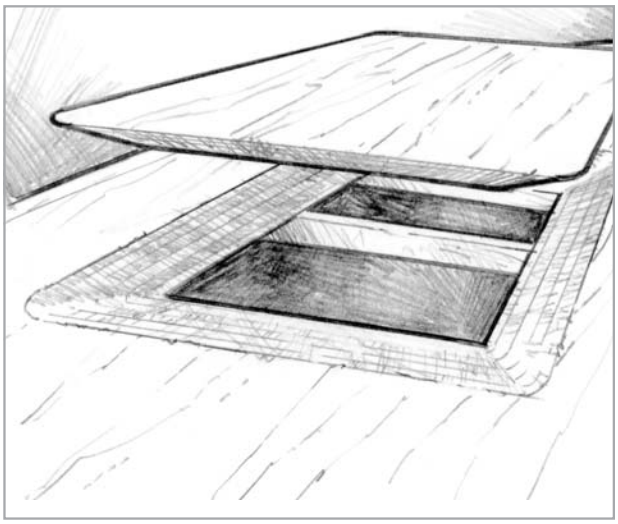

Figure 5-13 *Clamp a new repair patch in position with staples or screws.*

3. Fabricate the replacement panel using the same or equivalent plywood as the original. Cut the panel to the outside dimensions of the bevel or step.

   a. Use the disc sander to machine a bevel on the inside edge of the replacement panel to match the bevel on the opening. Dry fit the new panel to fit slightly below the existing surface *(Figure 5-13)*.

   b. Use the router with the straight fluted bit to machine steps in the edges of the replacement panel to match the steps around the opening. If multiple layers of

plywood are to be used, cut one layer to the dimension of each step. Dry fit the new panel to fit slightly below the existing surface.

4. Wet out the bonding area of the panels with resin/hardener mixture. Recoat the end grain as necessary. (Plywood end grain will absorb a lot of epoxy.)
5. Apply thickened epoxy/403 or 406 (mayonnaise consistency) to the new panel's bonding area. Apply enough thickened epoxy so that a small amount will squeeze out when you push the new panel into its dry-fit position.
6. Clamp the new panel in position with temporary staples or screws. Permanent fasteners should be non-corroding and pilot holes should be wet out with epoxy. Clean up excess epoxy before it cures. Allow the epoxy to cure thoroughly before removing clamps. Bond multiple thinner layers in place, one at a time, following the same procedure. Use a thinner epoxy mixture on the flat bonding areas between the layers.
7. Sand the surface and fill low areas with epoxy/407 or 410 low-density filler (peanut butter consistency). Use a spreader to apply the thickened epoxy, slightly overfilling low areas on the surface. Allow the mixture to cure thoroughly before fairing.

5.3.3 Replacing/installing plywood

You may install new plywood over exposed frames or over existing hull or deck surfaces. Plywood used as the primary skin (bonded directly to the frames) may be laid out with scarfed joints falling directly over the frames or with butt joints over backing plates between the frames. Scarfed joints offer a cleaner appearance from the interior. The frame spacing and size of the boat determine the thickness of the plywood. The amount of compounding determines whether the total thickness can be applied in one layer or in multiple layers. Apply thinner plywood in multiple layers if one layer is too thick to bend over a curved surface. Apply a primary plywood skin as follows:

1. Prepare plywood panels, scarf joints and beam surfaces. Plan the panel layout and order of assembly so that the scarf on the following sheet lies *over* the scarf on the previous sheet *(Figure 5-14)*.
2. Wet out the bonding surfaces of the plywood and frames. Wet out scarfs on the ends of adjoining sheets.
3. Apply a coat of thickened epoxy/406 mixture to the bonding surfaces of the frame and the scarf of the previous sheet.
4. Lay the sheet in position over the frames. Align the scarf joint to avoid overlapping.

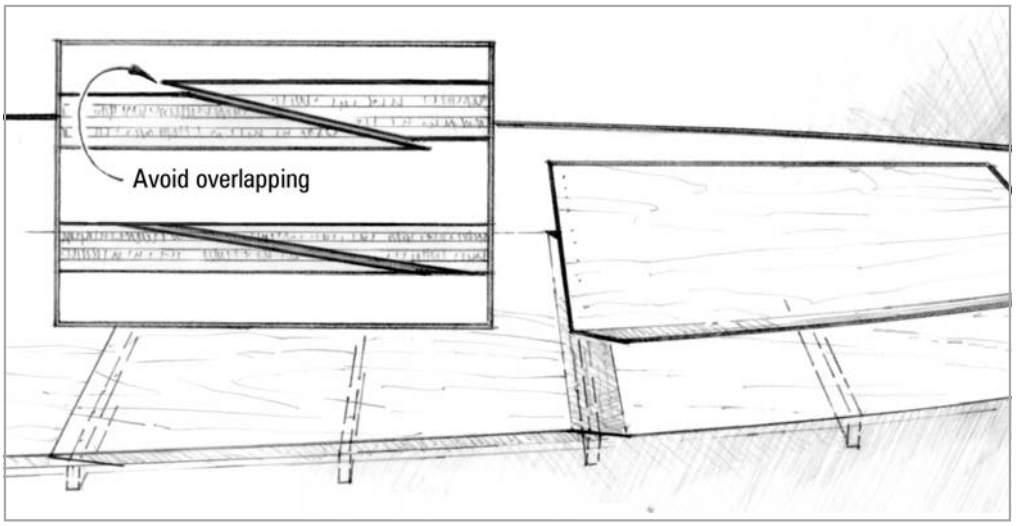

Figure 5-14 *Plan the panel layout so that scarf joints will fall over beams for better clamping.*

5. Clamp the sheet temporarily with drywall screws or staples. Use enough fasteners to clamp the sheet evenly. The epoxy mixture should squeeze out of the joints, assuring good adhesive contact. Station someone inside to clean excess epoxy at the frames and joints. The excess can be scraped clean or shaped into a fillet before it begins to cure.
6. Repeat the process with the remaining sheets. Allow the joints to cure thoroughly before removing temporary fasteners.
7. Sand the joints and fair the surface before adding another layer of plywood, fiberglassing (Section 8.4.5) or finishing (Section 7).

5.3.4 Applying plywood over existing skins

When laminating an additional layer of plywood over an existing hull or deck, it's not necessary to scarf joints or place joints directly over frames because of the large bonding area. Restore existing plywood to sound condition before laminating new sheets over it. Laminate new plywood over an existing deck or hull as follows:

1. Rebond delaminated layers of plywood, after drying thoroughly. Drill a pattern of 1/8" holes in the delaminated area. Use a syringe to inject a slightly thickened epoxy/406 mixture in all of the holes to reach all of the delaminated area. Use staples or screws to clamp the layers together until the epoxy cures. When the epoxy has cured thoroughly, proceed with Step 2.
2. Sand the surface fair to clean, bare wood. Remove all old finishes and contaminants.
3. Open existing joints with a scraper, saw or router and fill the joints with epoxy. Repair with fiberglass tape, if necessary, as suggested in Section 5.3.1.
4. Cut out severely damaged areas and scarf in new plywood, if necessary, as suggested in Section 5.3.2.
5. Plan the layout of the new plywood sheets to avoid new joints falling over existing joints.
6. Apply an epoxy/406 mixture to both bonding surfaces with a roller. Thicken the mixture to a catsup consistency to allow some penetration and still bridge any gaps between the surfaces. If the surface is rough or uneven, thicken the epoxy mixture to a mayonnaise consistency and apply with a notched spreader.
7. Clamp the sheet in position with an even pattern of temporary screws or staples. Clean up excess epoxy at the joints. Repeat the procedure with each sheet. Allow the epoxy to cure thoroughly before removing temporary fasteners.
8. Sand the surface fair before final finishing.

5.4 Molded or laminated veneer repairs

Another option for skin covering uses strips of thin veneer instead of sheets of plywood. Laminated boats were and are being built by gluing layers of thin veneers together over curved forms, in effect building a sheet of plywood in the shape of a boat. This technique has produced lightweight rigid hulls that aren't limited to the flat surfaces and hard chines of plywood boats. Using veneers for skin repairs offers the advantage of being able to conform to any curved shape, especially compound curves. This advantage can be used for repairs in several ways. Veneers can be used to patch small sections of laminated hulls that are too curved for a plywood patch. On a larger scale, laminating layers of veneer over an existing plywood or carvel planked hull is an excellent method of adding a lot of stiffness to a hull or deck without removing the existing skin. More detailed information about laminating veneers as a building technique can be found in *002 The Gougeon Brothers On Boat Construction*.

5.4.1 Laminating a curved patch in place

Laminating a patch for repairing a molded panel combines two procedures already covered: repairing damaged plywood sections and laminating frames. Laminating a curved panel section in a large damaged area requires temporary backup stringers to act as a jig. Laminate the patch in place as follows:

1. Remove the damaged section of the panel. Define the area of damage. Use a circular saw or reciprocating saw to cut the smallest square or rectangle that removes all of the damage *(Figure 5-15)*. Check the extent of damage on the interior of the panel as well.

Figure 5-15 *Remove the damaged section.*

Figure 5-16 *Bevel the edges and fasten temporary stringers to the back of the opening.*

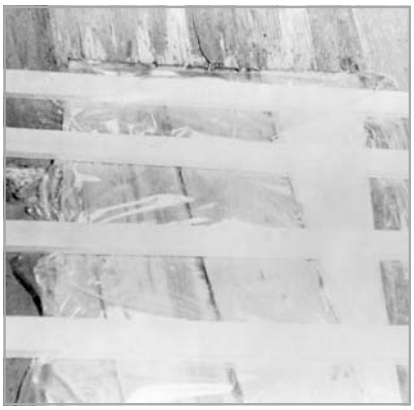

Figure 5-17 *Cover the stringers with plastic to prevent bonding. (View from inside of hull).*

2. Scarf the edges of the opening with a disc sander. Grind a minimum 8-to-1 bevel back from the edges of the opening. (If, for example, the panel plywood is ½" thick, the bevel should extend at least 4" from the edge of the hole on each side.)
3. Fasten temporary stringers to the back side of the opening with screws *(Figure 5-16)*. The stringers should be strong enough and spaced closely enough to hold the veneers to the proper shape. Cover the stringers with plastic to prevent bonding *(Figure 5-17)*.
4. Staple the first layer of veneers over the stringers. Run the veneers diagonally, approximately 35° from vertical. Scarf the ends of the veneers to match the scarf on the edge of the opening. Bond these first layer veneers only where the scarfs make contact, using the bonding procedure in Section 8.4.2. Use 403 or 406 filler to thicken the epoxy to a mayonnaise consistency.

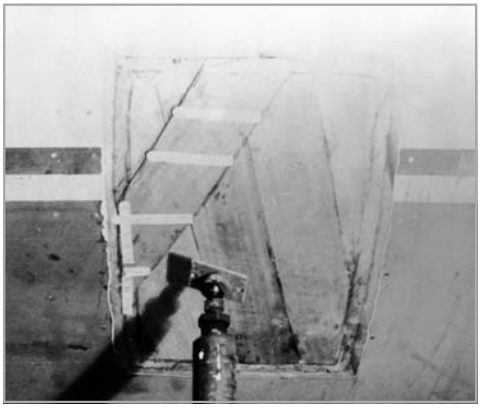

Figure 5-18 *Bond the second layer in the opposite diagonal to the first layer.*

Figure 5-19 *Continue until all the layers are completed, matching the skin thickness.*

5 Bond the second layer of veneers after the first layer has reached a partial cure, or a full cure with sanding *(Figure 5-18)*. Run the veneers diagonally in the opposite direction, about 35° from vertical. Remove the staples only in the area under the veneer being bonded. Coat the face of the new veneer and the contact area of the first layer including both scarfs. Staple through the veneers into the stringers and at the scarfs as necessary to hold the veneers flat.

6. Continue until all the veneers are in place and you've matched the thickness of the original skin *(Figure 5-19)*. By removing the staples in the previous layer only under the new veneer, all previous layers of veneer will stay in place even though the epoxy has not thoroughly cured. This will allow you to bond several layers of veneers in one continuous operation. Be sure the staples are long enough to provide clamping pressure by penetrating to the stringers or veneers that have cured fully. Allow the final layer to cure thoroughly before removing staples, fairing and final finishing.

5.4.2 Laminating a patch away from the damaged area

A panel section also can be repaired by using the existing skin as a form to laminate a patch panel and then bonding the pre-formed patch in, in one piece. The size of the patch should include the damaged area plus an 8-to-1 scarf beyond the damaged area. Tape a sheet of plastic over and beyond the area you wish to use as a mold surface. An adjacent area that is curved slightly more than the damaged area is an ideal mold surface because it compensates for veneer springback during molding *(Figure 5-20)*. After laminating the appropriate number of veneers to equal the size and thickness of the damaged section (plus scarf), prepare matching scarfs on the damaged area and the patch. Then bond the patch into place using the procedure described previously in Section 5.3.2.

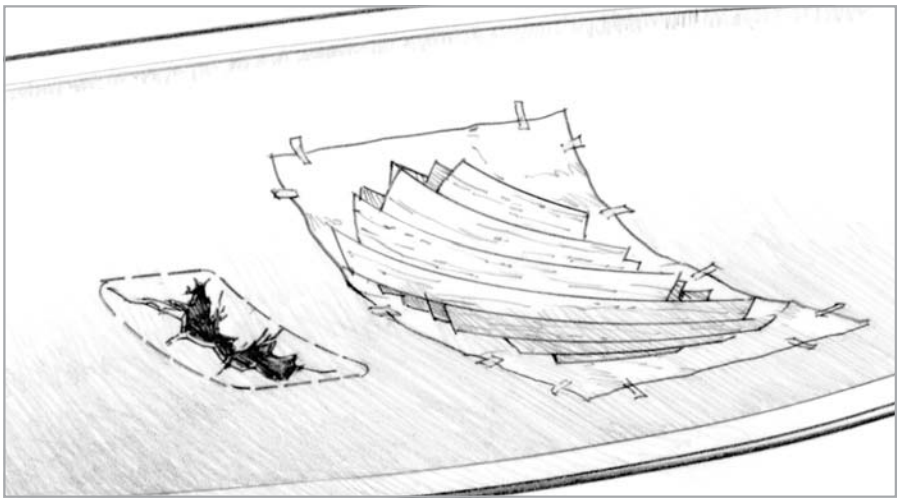

Figure 5-20 *Laminate a replacement panel using the surface next to the damaged area as a mold.*

5.4.3 Laminating a new skin over an old skin.

The technique of laminating one or more veneers over an existing hull has breathed new life into many boats that otherwise would have been given up for dead. The thickness and species of the new skin depends on how much strength is left in the old skin. If the hull can be supported in the proper shape, the new skin could replace the function of the old skin entirely. After you've established the total thickness and type of wood, determine the thickness and number of layers of veneer. As a rule, use the thickest and fewest layers of veneers that can bend and clamp to the tightest curves on

the hull. Bonding all the seams of a planked hull before adding veneers to the hull will add stiffness and reduce the total thickness of veneers required (see Section 5.1). Laminate veneers to an existing skin as follows:

1. Prepare the existing hull for bonding. Be sure the surface is clean, dry and sanded. Support the hull in its proper shape. Fill and fair low areas that are too big for the veneers to bridge. Grind off any high spots that could keep the veneers from lying flat.
2. Bond the first veneer about midpoint on the hull. Use the one-step bonding technique (Section 8.4.2) with an epoxy/403 filler mixture. Staple the veneer so it lies flat against the surface at about a 35° diagonal *(Figure 5-21)*. Adjust the angle as necessary to allow the veneer to lie flat along its full length.

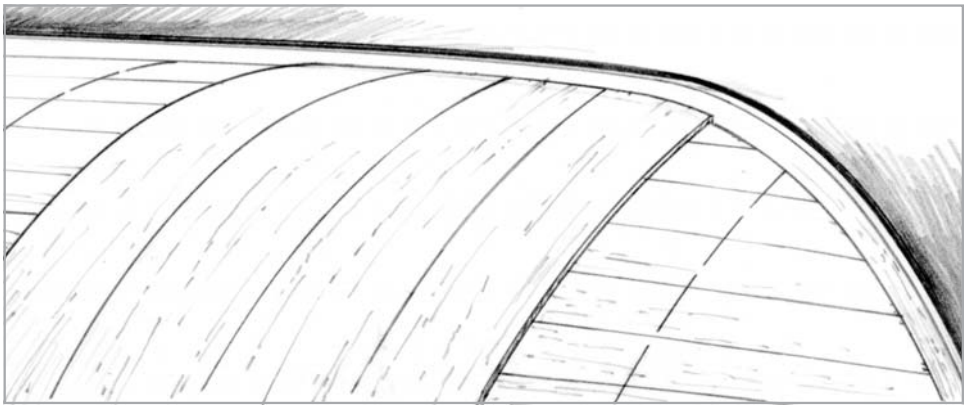

Figure 5-21 *Bond the first layer at an angle that allows it to lie flat against the surface.*

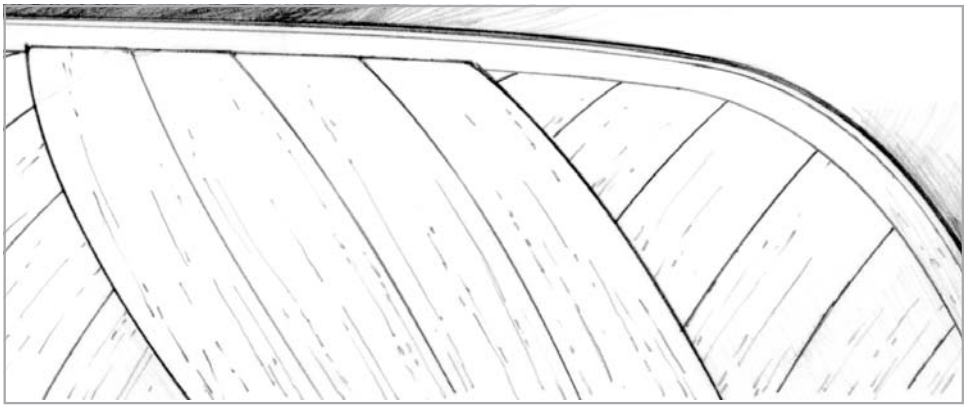

Figure 5-22 *Bond the second layer of veneers in the opposite diagonal to the first layer.*

3. Bond the remaining veneers of the first layer. Trim the second veneer to fit tight against the first and lie flat against the surface. The ends of the veneer may have to be tapered if the surface is a compound curve. Bond and staple the second veneer in place. Continue trimming and bonding veneers in each direction from the first veneer.
4. Sand the surface fair after the epoxy cures thoroughly. Staples should be removed before sanding unless they are a non-corroding type which may be left in.
5. Repeat the process on the second layer *(Figure 5-22)*. Begin with the first veneer about midpoint at a 35° diagonal in the opposite direction to the first layer. Trim and bond the remaining veneers.
6. Repeat the process on the remaining layers. Remove the staples after the last layer has cured. Sand the surface fair and prepare it for final finishing.

5.5 Installing a teak veneer deck

Thin strips of teak bedded in a thick epoxy/graphite layer give you an authentic teak deck that is both durable and low in maintenance. Although strips of up to ¼" thickness may be used, the effects of dimensional change can be limited by using thinner, ⅛"-thick strips. A ⅛"-thick deck will provide you with years of service in high-traffic areas, and it will keep the additional weight of a new teak deck to a minimum. Strips should be between 1½" and 2" wide, with edges planed smooth and straight. Leave the flat surfaces (top and bottom) rough sawn. The rough texture left by the saw improves the bonding characteristics of the strip. The remaining marks on the exposed surfaces will be sanded smooth after the new deck has been laid.

If you plan to mill your own stock, select a plank width that makes the most efficient use of the raw stock. Teak is generally available in 2"-thick, rough-sawn planks; you should get close to a 1¾" finished dimension from these planks. Saw the stock so that the strips will be edge-grained *(Figure 5-23)*. This will minimize expansion and contraction of the wood and make a more attractive, even-wearing surface than will slab-grained strips. Moisture content should be between 6% and 10%. Install a teak deck as follows:

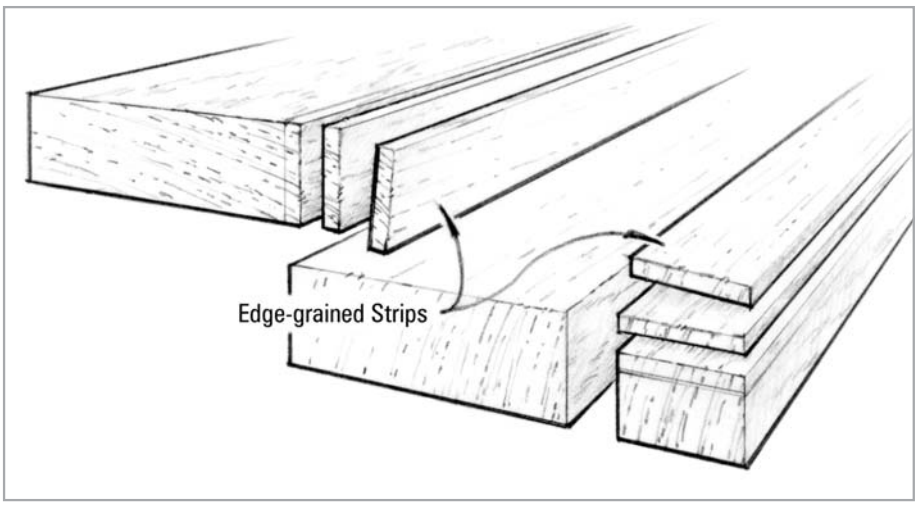

Figure 5-23 *Thin edge-grained strips provide an even wearing, attractive and dimensionally stable deck.*

1. Plan the pattern for the layout of the teak strips. Place the first teak strips in the desired location and then mark reference location points on the strips and on the deck.
2. Abrade any smooth bonding surfaces with 50-grit sandpaper and remove sanding dust. Wipe the planks with paper towels saturated with acetone or lacquer thinner 30 minutes before bonding.
3. Wet out the mating surface of the first few pieces of teak and the deck in the area of the first few strips with unthickened resin/hardener.
4. Apply a thickened epoxy mixture over the wet-out deck surface. Use 404 High-density filler (thickened to catsup–mayonnaise consistency depending on deck fairness) and add just enough 423 Graphite Powder to turn the mixture to an opaque black color. Apply a layer just thick enough to span any gaps and to squeeze up between the planks. An 809 Notched Spreader works well to apply an even layer over the substrate.
5. Locate your reference points and set the first strips in place.

6. Clamp the plank in place with #10 sheet metal screws and large washers. Place the screws and washers between the strips, 8" apart. Each row of screws will clamp the edges of two adjoining planks and act as spacers *(Figure 5-24 left)*. Coat the screws and washers with a mold release or place a small sheet of plastic under the washers to prevent bonding. Washers may also be cut from stiff plastic, thin wood lathe or similar stock with holes drilled for the screws. Tighten the screws down completely after pushing both adjoining strips tight against the screws. The epoxy mixture should squeeze up between the strips. Any voids between the planks should be filled at this time with the epoxy/404/graphite mixture.

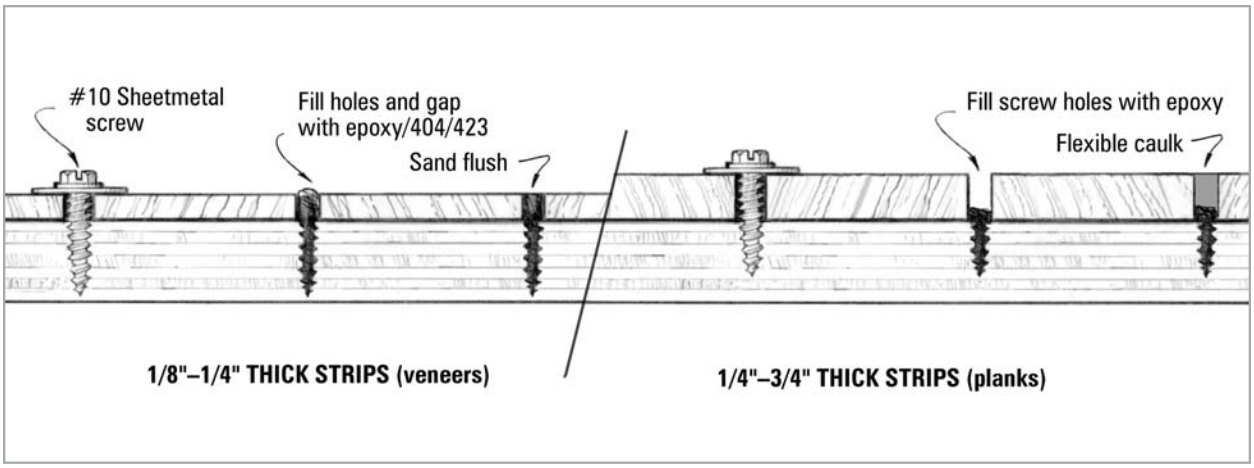

Figure 5-24 *Sheet metal screws with large washers will clamp the strips in position until the epoxy/404/graphite mixture cures thoroughly.*

7. Place the remaining strips, several at time, following the same procedure.
8. Allow the epoxy to cure between 8 and 24 hours before removing the screws and washers. If you wait any longer than this, it will become much harder to break the screws free. Tighten the screw slightly (5°) before backing it out. If you have difficulty removing a screw, heat the head with a soldering gun's cutter tip. While the screw is still hot, try to unscrew it again. Repeat until you are successful.
9. Fill the screw holes with epoxy/404/graphite mixture. A syringe loaded with the mixture will speed the process.
10. Sand the surface with a reciprocating sander and 50-grit sandpaper to level the epoxy and teak surfaces. Sand until the saw marks are removed from the teak surface. Fine sand with 80-grit sandpaper, and then finish with 120-grit. The teak surface may be left natural or finished with a marine-grade teak oil.
    Note: If planks thicker than ⅛" are used, do not fill between the planks with thickened epoxy. Instead, remove squeezed-out epoxy between planks and allow to cure. Remove the screws and washers and sand the top surface of the planks fair. Fill the joints with Thiokol or polysulfide caulk *(Figure 5-24 right)*.

6 Installing Hardware

Now that the deck is upgraded, the hardware should receive the same thorough attention. To overcome problems associated with hardware installation on wooden boats, Gougeon Brothers, Inc. has developed an approach called hardware bonding. As the name implies, hardware items are bonded (glued) to wood with the goal of distributing high, single-point loads over as large an area of wood fiber as possible, while allowing the epoxy to seal and protect the wood end grain exposed by the fastener hole. Note: the term "hardware bonding" as used in this manual does not refer to the electrical bonding of hardware to eliminate stray current corrosion.

There are two ways to do this. The first is to bond all fasteners (screws, bolts or threaded rod) directly to the surrounding wood fiber. The second is to bond both the fasteners and the hardware itself to the immediate wood fiber on which it rests. Using proper hardware bonding installation techniques, you can dramatically improve the load-carrying capacity of your hardware over that possible with standard hardware installation methods.

In saltwater applications, our experience has been that bonded hardware and fasteners show excellent resistance to corrosion attack. Where fasteners are vulnerable to flexure and saltwater attack (e.g., hollow or bridged traveler tracks, bonded U-bolts or solitary eyebolts) a small silicone sealant fillet covering the joint between the cured epoxy and the fastener will protect against moisture and salt intrusion. Of course, any exposed metal surface will be subject to the effects of saltwater corrosion; therefore proper maintenance and cleaning procedures must be practiced.

6.1 Fastener bonding

The fastener-to-wood bond can be done in several ways. The easiest and most common method is simply to wet out a standard-size pilot hole for a given fastener with resin/hardener. Make easy fastener bonds as follows:

1. Use a pipe cleaner or syringe to work the mixture well into the hole.
2. Insert the fastener in the hole and allow the epoxy to cure.
   This forms a wood/epoxy matrix around the fastener that is much stronger than the wood by itself, and distributes the fastener load over more of the wood fiber area.

6.2 Hardware bonding

You can further improve the load-carrying capability of the hardware by increasing the amount of epoxy that surrounds the fastener (taking advantage of the fact that WEST SYSTEM® epoxy has much higher density and strength than the wood fiber itself) and bonding the hardware base directly to the surface. Bond for increased load transfer as follows:

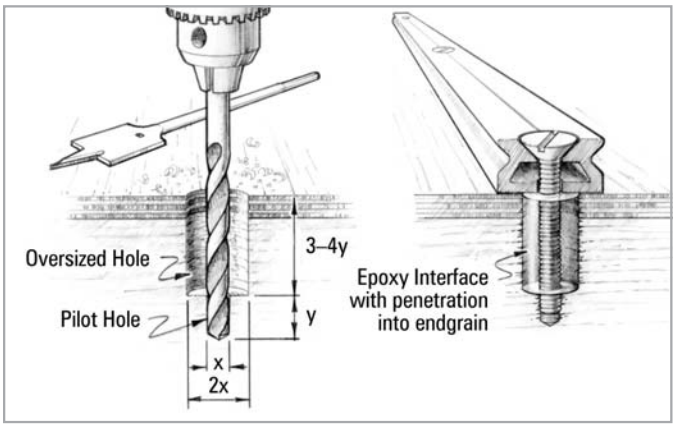

Figure 6-1 *A normal sized pilot hole at the bottom of the oversized hole provides enough clamping pressure to hold the hardware in position until the epoxy cures.*

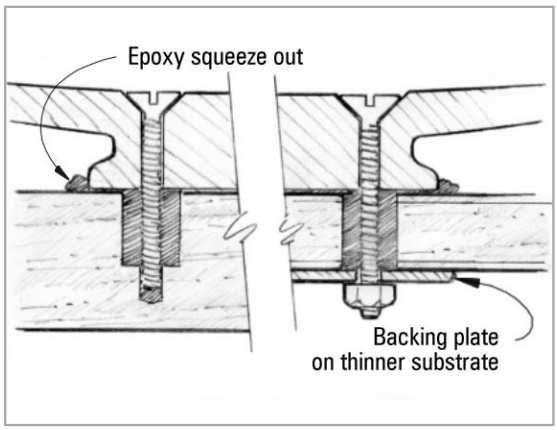

Figure 6-2 *Tighten the fasteners until a small amount of epoxy squeezes from the joint.*

1. Drill an oversized pilot hole to increase the amount of exposed wood area that the epoxy around the fastener will bond to. This may be much larger than the fastener—twice the fastener diameter, for example. Drill the hole 2/3 to 3/4 the depth of the fastener.
2. Drill a normal sized pilot hole at the bottom of the oversized hole to the full length of the fastener *(Figure 6-1)*. This allows the bottom threads of the fastener to bite into the wood fiber so the fastener will stay in proper position until the epoxy cures.
3. Prepare the hardware by washing the contact surface of the base with solvent to remove any contamination. Abrade the contact surface with a wire brush or 50-grit sandpaper to allow the epoxy to "key" into the surface.
4. Fill the holes to the top with epoxy. Allow the epoxy to soak into the exposed end grain of the wood for a few minutes. If the hole remains filled after 5 minutes, remove the epoxy with the syringe.
5. Coat the bottom contact surface of the hardware with unthickened epoxy. Wire brush or sand the wet epoxy into the surface with 50-grit sandpaper. Sanding the base, coated with epoxy, will expose the epoxy directly to fresh metal with no chance for the metal to oxidize.
6. Inject a non-sagging epoxy/404 or 406 mixture into the hole. Use enough mixture so there are no voids in the hole after inserting the fastener. Coat the bottom of the hardware and the *fastener threads* with the thickened mixture.
7. Place the hardware in position. Insert and tighten fasteners until a small amount of the mixture squeezes out of the joint *(Figure 6-2)*. Do not over tighten.
8. Clean the excess epoxy mixture that has squeezed out.
9. Allow the epoxy to cure at least 24 hours before applying load to the hardware. Allow more time in cool weather.

   Bonding the contact surface of a hardware item can contribute a great deal to load distribution over maximum wood surface area. You can use WEST SYSTEM epoxy to make good bonds with most metals. However, careful preparation of the metal surface is necessary for good adhesion. This includes sanding and acid etching. For example, aluminum requires a two-step surface preparation. The first step involves the use of an acid conditioner that removes corrosion. The second step chemically stabilizes the surface and prevents oxidation, allowing time for coating or bonding. The WEST SYSTEM 860 Aluminum Etch Kit contains complete instructions.

6.3 Casting epoxy bases for hardware

Occasionally, fittings must be set at specific angles to the hull or deck surfaces. Downrigger bases, lifeline stanchions, winches and turning blocks are all good examples. Traditionally, hand-carved, wedge-shaped shims have been used to achieve the proper angles with such fittings. Unfortunately, wooden shims require a great deal of time and carpentry skill. Hardware casting can save time and is easy to do; more importantly, it can result in a stronger, waterproof base. Cast the hardware at an angle to the surface as follows:

1. Prepare the bonding surfaces. Clean the substrate and hardware bonding surfaces with solvent to remove any contaminants. Sand the deck with 50-grit sandpaper. Apply a release agent, such as an automobile wax or a non-stick cooking spray, to the base of the hardware.
2. Position the hardware. Mark the outline of the hardware and shim it to its desired angle. Mark the shim locations. Often one edge of the fitting will rest on the deck and become the zero point for the required angle.
3. Wet out the substrate (deck) surface with resin/hardener mixture except for the shim locations.
4. Cast epoxy supports under the hardware *(Figure 6-3a)*. Prepare a mixture of resin/hardener/404 High-Density filler (peanut butter consistency). Use the mixing stick to place three portions of the mixture within the hardware outline, evenly spaced around the perimeter. Use enough of the mixture and pile the mixture high enough to contact the base of the hardware when it is shimmed in its proper position. When cured, the epoxy supports will take the place of the temporary shims. Set the fitting in place with the temporary shims holding the hardware at the proper height and angle. The bottom of the hardware should contact all three epoxy supports. Allow the epoxy supports to cure thoroughly.
5. Tap the hardware with a mallet to break it loose and remove the temporary shims. Mask off the area around the fitting with duct tape and plastic in case of accidental epoxy spills.
6. Prepare the deck and hardware for casting the base. Wash and sand the cured epoxy in the deck base area. Reapply mold release to the hardware base. At this time, mask off areas of the hardware that you don't want to come in contact with the epoxy. You may also find it helpful to place small pieces of tape over the holes in the hardware item to prevent the epoxy mixture from oozing up through them when the piece is repositioned.
7. Apply enough thickened epoxy/404 (peanut butter consistency) to fill the entire base area. If the base to be cast is more than ½" (12mm) thick, you may want to use 206 Slow Hardener to reduce the possibility of exothermic heat buildup during the curing process. Build up the mixture slightly taller than the base supports, roughly forming the shape of the base. Fill all voids around the epoxy supports.
8. Reset the hardware in its proper location. Slowly press it into the proper position on top of the cast epoxy supports. Allow excess epoxy mixture to squeeze out of the gap between the base of the hardware and the deck. Sculpt the squeezed out mixture into the desired shape *(Figure 6-3b)*. A standard fillet works well in this situation (Section 8.4.3). Add extra mixture if necessary for shaping or to fill any voids. Remove any excess before it cures. Allow the epoxy to cure thoroughly.
9. Tap the hardware with a mallet to remove it from the base. Clean the bottom of the hardware and the top of the cast base with solvent to remove the mold release. Sand both bonding surfaces with 50-grit paper.

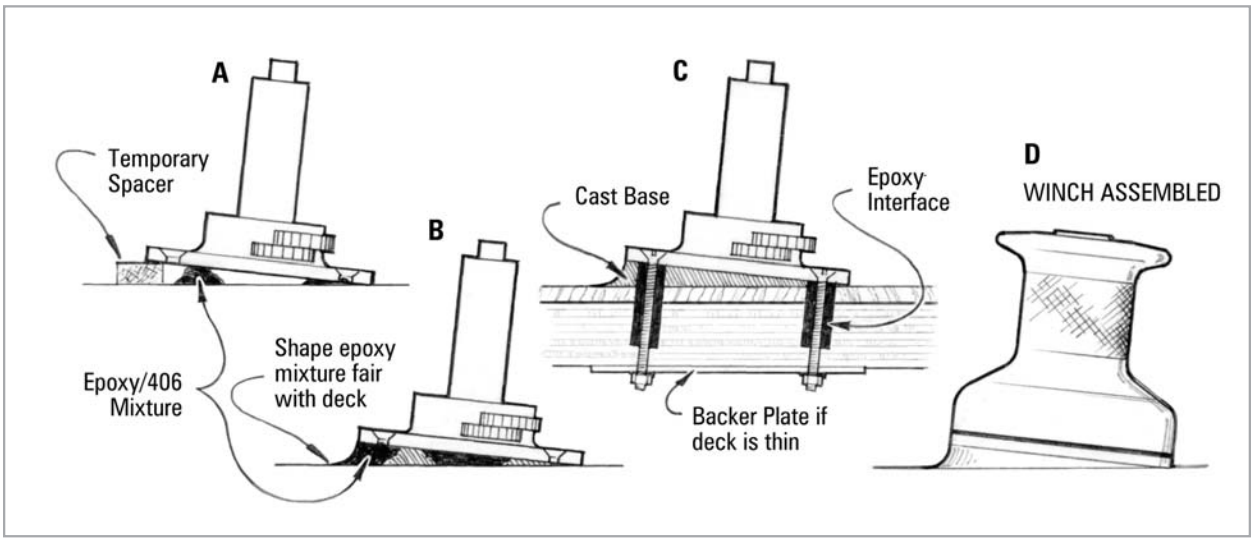

Figure 6-3 *Hardware casting is an excellent method for installing a piece of hardware that is not flush to the deck such as a winch.*

10. Sand the cast base to the desired final finish. Begin with 50-grit sandpaper or a file if the base is extremely irregular. Finish with 80-grit sandpaper.
11. Bond the hardware to the cast base using the hardware bonding procedure in section 6.2 *(Figure 6-3c)*. Drill oversized and standard pilot holes for the fasteners through the cast base. Allow to cure thoroughly before applying loads to the hardware. Apply three coats of resin/hardener mixture to the base before final finishing.

6.4 Bonding studs

Bond threaded rods or studs into the substrate (instead of bolts or screws) and attach the hardware with nuts. This variation is appropriate for many engine, motor or machine installations. Coat the base with wax/mold release to make the hardware removable. Although the hardware is not "bonded" to the substrate, the epoxy still provides a bearing surface that perfectly matches and supports the base of the hardware.

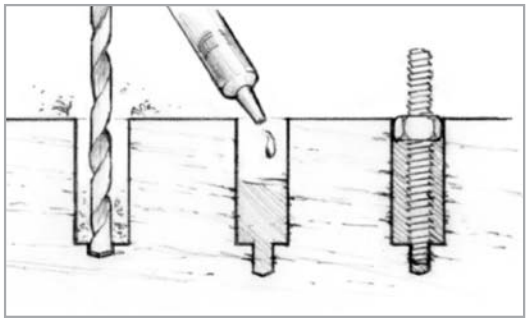

Figure 6-4 *Bond threaded rods or studs into the substrate as an alternative for easily removable hardware.*

1. Prepare the studs/threaded rods by waxing the upper ends (above the surface) and cleaning the lower ends (below the surface).
2. Place a nut and washer on the studs, wet out the lower ends and push them into the epoxy filled holes. Allow the epoxy to cure thoroughly before tightening the nuts *(Figure 6-4)*.

6.5 Removable hardware

Testing at Gougeon Brothers, Inc. has shown that with bonded fasteners (screws, bolts, threaded rods, etc.), the adhesive bond to the metal is not as important as the "keying" between the epoxy and the threads of the fastener. This factor allows the builder to coat the fastener with a thin film of mold release before bonding to permit easy fastener removal after the epoxy cures.

Fatigue tests of bonded threaded rods with and without a thin coating of mold release show only a 4-10% reduction in the overall fatigue strength of the fastener with mold release. A thin film mold release will yield a more predictable performance than a thick film. Mold release may include paste wax, non-stick cooking spray, silicone spray or hair spray. While the reduction in strength of the fastener treated with mold release is slight, it should be taken into account when calculating hardware loads. We recommend adhesive bonding to all hardware and fasteners rather than the use of mold release whenever possible.

6.6 Removing bonded hardware

Occasionally it is necessary to remove bonded hardware items. At temperatures above 150°F (66°C), cured epoxy begins to lose its physical properties; the resin softens and its bonding capacity is reduced considerably. You can use this characteristic to your advantage when you would like to remove a piece of bonded hardware.

1. Remove all fasteners. If you used a release agent on them when you bonded the piece in place, they should come loose without too much difficulty. If the fasteners were bonded in, it will be necessary to apply heat to them, using a soldering iron. The epoxy around the fastener will soften enough to loosen the fastener when enough heat is conducted down the fastener.
2. Heat the fitting briefly with a propane torch. Protect the area around the fitting from heat damage by covering with water-soaked plywood. Allow the heat to conduct through the base of the hardware. A sharp rap with a mallet should be enough to dislodge the hardware. If the fitting doesn't break loose easily the first time, don't force it. Heat it a second time with the torch and try again.
3. Replace the hardware by following the procedures in Section 6.2. Redrill the fastener holes in the existing epoxy as you would for a new installation.

7 Protecting and Maintaining Wooden Boats

7.1 Sunlight and protective coatings

Sunlight poses a threat to the structure and finish of all composite boats. It attacks in two ways: heat and ultraviolet (UV) rays. Any epoxy finishes without protective coatings are vulnerable to rapid ultraviolet degradation. WEST SYSTEM® Brand epoxy, including the 207 Special Coating Hardener, is not intended to be used as a final finish. Therefore, you should cover bare epoxy that will be exposed to direct sunlight as soon as possible with an opaque paint or a clear coating (varnish). If the surface is to be painted, add pigment to the last two coats of epoxy to protect the surface. Surfaces that receive indirect UV exposure, such as those below decks, will last much longer without a protective coating than directly exposed surfaces.

While a clear coating has an inherently shorter life span than a paint finish, there is a tradition among wooden boat owners of using clear coatings to preserve and enhance the natural beauty of wood. For many, the major attraction of wooden boats is the beauty of wood itself and they are willing to invest a lot of time and money to achieve near perfection in their wood finishes.

Unfortunately, these beautiful finishes seldom last forever because of exposure to the sun. The boats must ultimately be stripped down and redone, usually at great expense. Because of this, owners want the finish to have the longest possible life span.

The first phase of finish breakdown is loss of gloss, so surface gloss retention is essential for coating longevity. Clear coating breakdown by sunlight has two root causes. The first is the gradual breakdown of the coating material. The second is the slight chemical and physical change which takes place within the surface wood cells affected by the sunlight through the clear coating. It is thought that this change in the wood cells contributes to the coating failure by promoting a physical separation of an already weakened coating from the ultraviolet-altered wood surface.

We are often asked how long a coating will last over a wooden surface. The answer is not simple because the life span of any coating depends on many factors. We consider the following to be the most important:

1. The number of hours of exposure to sunlight in a given climate. Cloudy climates are less hostile than sunny climates. A southern Florida location is far worse than one in Maine because on average the solar radiation in Florida is less filtered by the atmosphere.

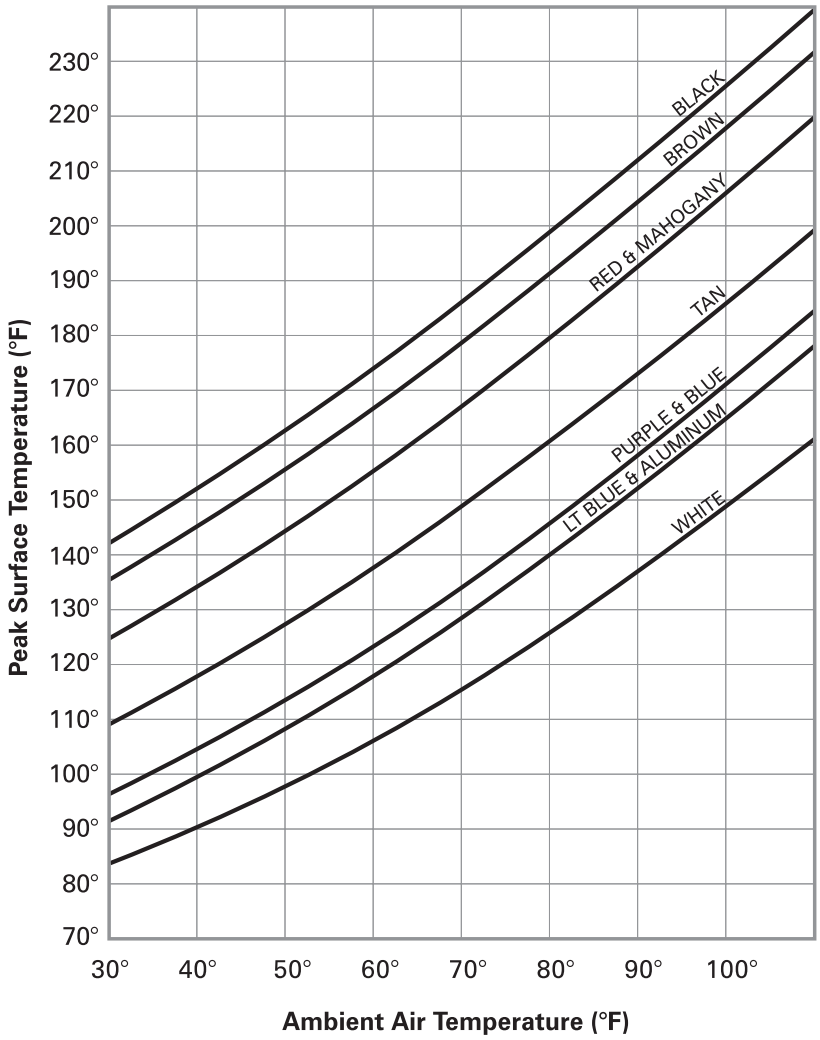

Figure 7-1 *Effect of color on surface temperature under sunlight.*

2. The angle of the exposed surface to the sunlight. For example, a deck will receive much more direct radiation at high noon, when the sun's destructive UV rays are most damaging, than would cabin sides.
3. Highly glossy surfaces are more reflective of UV rays (and thus less vulnerable) than are dull surfaces, no matter what the color.
4. Lighter colored woods are more reflective than darker colored woods, just as lighter colored paints are far more reflective than are darker colors *(Figure 7-1)*.
5. Thicker clear coatings last longer and offer more protection than thinner coatings.
6. Varnishes with large amounts of UV inhibitors last much longer than varnishes without this additive. Modern two-part polyurethane varnishes last longer than the more traditional phenolic varnishes.
7. A high-strength epoxy resin undercoating, such as WEST SYSTEM 105/207 mixture, when used as a saturation coat under a varnish, provides a greater life span than the use of varnish alone. A bonus is dramatically improved moisture resistance.

   Gougeon Brothers, Inc. has studied the effect of these factors through many years of observation and experimentation with all types of finishes, particularly clear finishes. In the laboratory, we have used a weathering machine to accelerate UV damage to coated surfaces so that we have direct comparisons between different products, finish

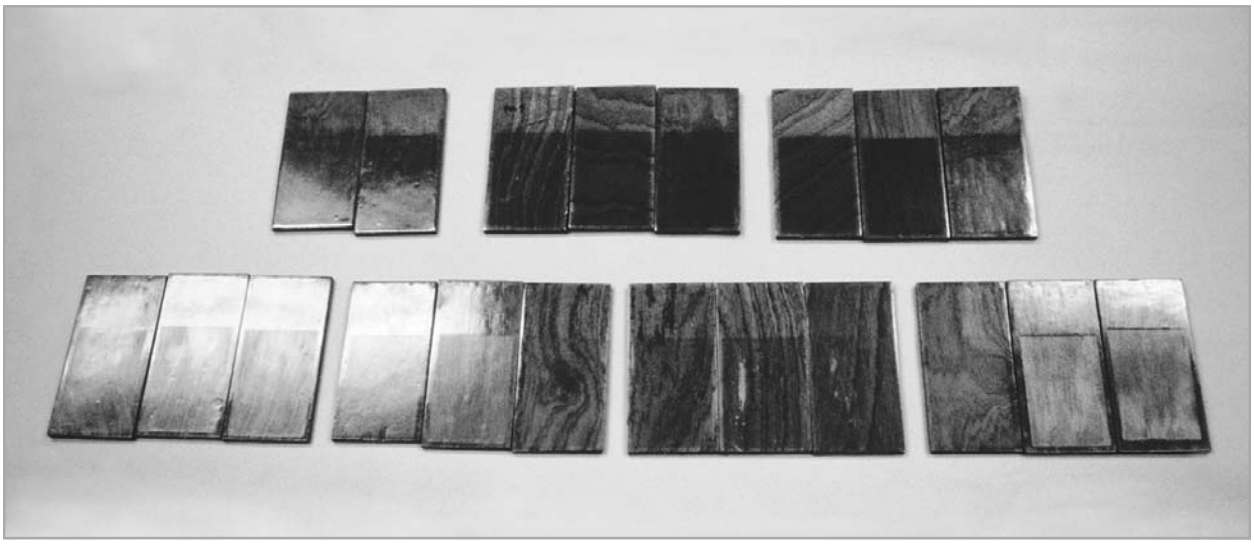

Figure 7-2 *UV test samples after 3600 hours in weathering machine.*

types, surface preparations, and coating substrates in a controlled test environment *(Figure 7-2)*. This testing has allowed us to evaluate a wide range of variables and samples and has guided us in the development of WEST SYSTEM 207 Special Coating Hardener. When used with, a high quality two-part polyurethane they provide a superior quality clear finish with excellent resistance to damage from moisture and UV radiation.

7.2 Applying the final epoxy coatings

The object of final coating is to build up an epoxy coating that provides and effective moisture barrier and a smooth base for clear coatings or paint. A minimum of two coats of WEST SYSTEM epoxy will provide an effective moisture barrier. Apply three coats when sanding is required. Since sanding is required before applying the finish coating, this is the standard practice. Apply up to five or six coats if you plan to do a lot of sanding or want the maximum moisture barrier or a deeper finish. Each coat achieves a 3-4 mil thickness. The maximum recommended thickness is 15-20 mil.

We recommend WEST SYSTEM 207 Special Coating Hardener be used for the highest quality, longest-lasting clear finish. 207 contains a UV filter that improves the ability of the mixed 105/207 epoxy to resist the harmful effects of sunlight without compromising moisture resistance. Keep in mind that although 207 is very clear, it is not colorless. It has a light amber color similar to spar varnish that will tint wood slightly warmer and darker. If you are not interested in a clear finish, select the hardener (205, 206 or 209) that best meets your needs.

General procedures for final epoxy coating are listed in the *WEST SYSTEM User Manual & Product Guide*. The following are specially applicable for using 207 Special Coating Hardener to prepare for a deep lustrous finish in the fastest possible time:

1. Sand and fair the wood surface using 80-grit or finer paper. Always sand in the grain direction.
2. Apply a saturation coat of 105/207 to the bare wood surface and allow to cure thoroughly at room temperature. The cured saturation coat will cause the wood surface to “swell up” and feel rough. Wash and sand or scrape the swelled wood grain to a moderate smoothness. (Be careful to avoid sanding through this initial saturation coat.)

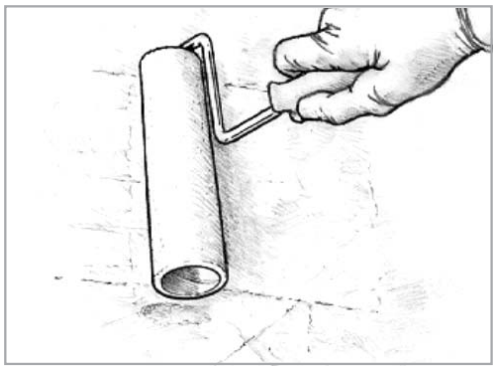

Figure 7-3 *Roll lightly and randomly over a small area. Spread the epoxy into a thin even film.*

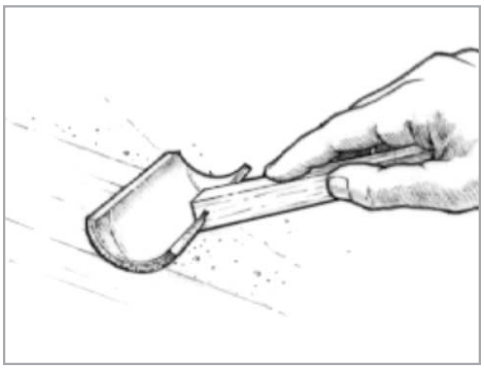

Figure 7-4 *Tip off the coating by dragging a foam roller brush lightly over the fresh epoxy.*

3. Apply a second coat of 105/207 using the roller *(Figure 7-3)* and tip off the surface with a foam brush. Drag the brush across the surface of the fresh epoxy in light overlapping strokes in the direction of the wood grain *(Figure 7-4)*. Level out the coating as much as possible. *NOTE: Apply the epoxy in thin coats. The thinner the film, the easier it is to keep it even and prevent runs and sags.*
4. Apply a third coat while the second coat is still slightly tacky. You can add any number of coats to build up the desired coating thickness while the previous coat is still slightly tacky. Be sure to level out each fresh coating with the foam brush.
5. Allow these coats to cure fully. The cure can be accelerated with moderate heat, but too much heat may cause bubbling.

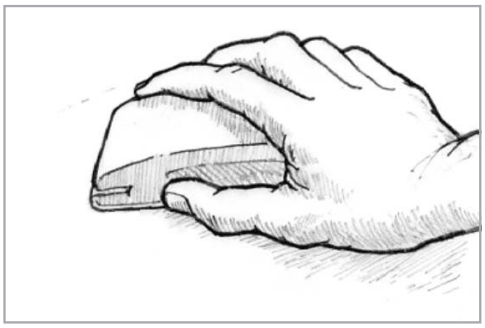

Figure 7-5 *Wet sand to a smooth finish.*

Figure 7-6 *Rinse water should sheet without beading, indicating an uncontaminated surface.*

6. Wet sand the cured 105/207 epoxy surface to a 220-grit or finer finish *(Figure 7-5)*. Rinse the surface with clean water. Rinse water should sheet evenly, without beading or fisheyeing. If rinse water beads up (a sign of contamination), wipe the area with solvent and dry with paper towels, then wet sand again until beading is eliminated. Proceed with the finish coating after the surface has died thoroughly. See Section 8.4.1, *Surface preparation, Special preparation for various materials, Cured epoxy.*

7.3 Clear finish coatings

Even though a properly applied 105/207 coating may have a high gloss finish equal to that of a good varnish, we recommend that this surface be coated with a top quality spar varnish for UV protection and maximum performance. Two-part polyurethanes bond well to cured WEST SYSTEM epoxy surfaces and provide great hardness and

durability while retaining a high-gloss, UV-resistant surface. Be sure the surface is properly prepared, see Section 8.4.1.

1. Thoroughly mix the two-part polyurethane varnish in the proper ratio.
2. For major applications over large surface areas, always use the 800 Foam Roller which will give a more uniform application in less time. This means runs are less likely during application and you will have more time to do touch up.
3. Use a high quality brush with a tapered tip, 2" to 3" wide, depending on the intricacies of the surface to be coated.
4. During application, the roller will leave a slightly stippled surface with some air entrapped in the coating. In most instances this stipple will flow out and the bubbles will pop on their own to leave a smooth, high-gloss surface upon cure. In some conditions, you will need to brush out the rolled-on coating to assist the leveling process. Do this by lightly brushing the surface with smooth, even strokes as soon as possible after you have applied the varnish. Be aware that the time available to perform this "tipping off" will vary by climate. Cooler temperatures should allow 5 to 10 minutes to tip off a newly applied coating with no difficulty; hot, dry conditions will allow you less time.

   For health reasons, we do not recommend spraying two-part polyurethane. Inhalation of fumes, dust, vapors and droplets must be avoided. Spraying marine paints in general is not recommended except if done by a trained professional with industrial grade equipment and only in properly ventilated areas.

   We are often asked how many coats of varnish you should apply. The answer is the more the better, with the important understanding that the final coat always needs a high gloss for longevity. Initially apply one or two coats over the 105/207 epoxy base. Then plan to apply a new coat every year or two to assure a continued glossy surface. This approach not only renews the surface to a high gloss, but also takes care of any dings or scratches. Thus it has the potential to provide the longest-lasting finish before you have to strip the surface back to bare wood and refinish from scratch.

7.4 Paint

The longest-lasting finishes are fully pigmented paints. Pigments filter out all or most of the harmful UV rays, thus protecting the substrate. However, a slow oxidation of the surface occurs over many years, causing it to lose its gloss. Light colored paints are more reflective and maintain their gloss longer than darker colors. Protecting the substrate from heat is another important reason to choose lighter colors *(Figure 7-1)*.

We have tried many types of paint supplied by a variety of manufacturers. The more recently developed linear polyurethanes (LP) are superior to any other paint we have used. We recommend them as the best painting system to use over a cured WEST SYSTEM epoxy surface. The LP systems have excellent resistance to sunlight, salt spray and other weathering factors. They possess outstanding abrasion resistance and hardness that can equal or surpass that of polyester gel coat. Best of all, LP paints bond well to a cured WEST SYSTEM epoxy surface.

Until recently, most LP paint systems were designed for spray application and application difficulties somewhat restricted their marine use. However, several of the large paint companies have now developed brushable LP systems which we have applied with rollers and brushes on several recent projects. While brushing may not be quite as fast as spraying, the preparation time required for brushing is much less. Thus, there is not a great time difference between the two methods, and in some situations brushing could even be faster.

Safety

Unfortunately, LP systems pose a significant health hazard mainly due to spraying action. LP systems contain small amounts (1% to 2%) of a highly toxic material called isocyanate. When sprayed, this isocyanate is atomized. Most manufacturers recommend use of a supplied air hood to prevent breathing or contacting any contaminated air.

Brush application of LP paint systems reduces the isocyanate problem to almost nothing because without atomization the isocyanate does not escape into the atmosphere to be inhaled. Thus you can avoid the major obstacle to using LP systems by applying the material with a brush instead of spraying. However, with either brush or spray application, some solvents will escape into the atmosphere. Without adequate ventilation of the painting area, solvent fumes from any type of paint system can be dangerous and uncomfortable to breathe.

7.4.1 Surface glazing

Glazing or surfacing compounds often reduce finishing time. These products are much thinner than standard puttying fillers so you can apply them quickly in a thin film over large areas. We recommend using a wide putty knife or spreader to apply surfacer. This technique results in a smooth surface which is not difficult to sand to a fine finish. Since small particles of dirt can interfere with your finish, be sure your wood is clean before applying these products.

Surfacing compounds have an advantage over primer paints in that surfacers are high-solids materials and can be used easily to fill small voids and depressions in a cured resin surface. Often the choice is between sanding away small air holes and valleys or filling them. Extra sanding takes time and may remove too much protective coating, so surfacing compounds are a good alternative.

Paint companies market surfacing compounds with instructions for their use. If you will be using a linear polyurethane (LP) paint system, be sure to select a surfacer which can be used under the paint. (LP paint systems use aggressive solvents which can lift some coatings or fillers.) When using surfacing compounds, be aware of the consistency of the compound as you are applying it. If it is too thick, it will be difficult to apply in a controlled thin film and cause some buildup on the surface. If it is too thin, you will lose filling power. However, it is better if the compound is on the thin side because you can always apply another coat if the first was not sufficient, and this is faster than sanding. You can control surfacing compound consistency by adding the manufacturer-recommended amount of thinner. You may have to do this at regular intervals to make up for the evaporation of thinner as you apply the compound. For best results, use a drywaller's taping knife, 6" to 8" wide. Make sure that the surface to which you are applying the compound is clean.

7.4.2 Primers

We find that we rarely need primer paints when we coat hulls with WEST SYSTEM epoxy. Primers can't, of course, be used on naturally finished hulls, but even on painted surfaces they don't greatly reduce finishing time.

Primers are not usually needed to help bond a paint film to a cured WEST SYSTEM epoxy surface. Most finish coatings adhere to an epoxy-coated surface that has been sanded well, although interfacing primers are required with some specialized bottom paints. If the instructions on your paint or varnish recommend a primed surface, sand the epoxy coating until it is no longer glossy and follow the directions given by the manufacturer for preparation. Test the product in an inconspicuous area to be sure that it will bond to epoxy. If any product fails to dry within the period specified on its packaging, try a different brand or use a primer.

Primers are sometimes used to make sanding quicker. The theory is that primers are easier to sand than epoxy; while this may be true in some situations, you must weigh the benefit against the time needed to apply the primer and to get an even surface. Primers are difficult to apply evenly with a roller or brush, are unsafe to spray, and do not flow out as well as WEST SYSTEM epoxy, so a good deal of sanding is needed just to get the primer as smooth as the original rough-sanded epoxy surface.

A colored base coat will ease final fairing by serving as a guide to prevent oversanding and will also reduce the number of coats of paint needed to cover an unpainted surface. When we plan to paint a hull, we add WEST SYSTEM Color Pigment to our final coat of epoxy, and use this instead of primer as a tracer coat.

7.5 Repairing dings and cracks

After repair or restoration, continue to inspect your boat carefully for damage. Look for hairline cracks at the joints. There will probably be some in the first year after the repair. See if boat flexure is the source of the crack or if moisture intrusion is causing expansion and cracking. You do not need to repair these cracks instantly. When you pull out your boat in the fall, sand or scrape the cracks slightly and allow the area to dry. Repair the epoxy coating and replace any paint or varnish used over it.

Touch up dings to the varnish or paint to maintain their effective moisture and UV barriers. Plan to apply a new coat of varnish every year or two. The linear polyester/polyurethane coatings do not take buffing like a gelcoat so we recommend careful application. The acrylic/polyurethanes can be buffed but seem less durable.

7.6 Ventilation for longevity

Ventilation is a key factor in the continued longevity of your boat. Keeping the boat's interior as dry as possible is the best preventive maintenance for preserving the structure and making the boat more comfortable.

Keep the bilges as dry as possible. This is a good idea whether or not you have coated the bilges with epoxy. Make sure that drainage is good and that there are no hidden areas in the bilges where water can lie. Limber holes should be large and open. For safety and longer coating life, keep fuel and oil out of the bilges.

An open interior layout is better for ventilation. Do not let clutter build up. See that no water-absorbent materials (leaves or clothing) are in contact with the hull or interior joiner work.

Watertight deck or cabin openings and effective ventilators with good drainage (such as dorade boxes or mushrooms) can make the boat more comfortable when in use and drier at the dock or mooring. If using a fabric mooring cover, vents are available that can be sewn or snapped into the cover fabric to provide ventilation as well as weather protection.

All of these factors work together to provide good ventilation. If you have questions about options, we suggest you consult the books listed in Appendix–Additional reading, page 77.

8 Using WEST SYSTEM® Epoxy

This section is designed to help you understand and safely handle WEST SYSTEM epoxy products and to provide the basic techniques used in most repair and building operations. Refer to the WEST SYSTEM *User Manual & Product Guide* for more complete product information.

8.1 Epoxy safety

Epoxies are safe when handled properly. To use WEST SYSTEM epoxies safely, you must understand their hazards and take precautions to avoid them.

Hazards

The primary hazard associated with epoxy involves skin contact. WEST SYSTEM Resins may cause moderate skin irritation. WEST SYSTEM Hardeners are corrosive and may cause severe skin irritation. Resins and hardeners are also sensitizers and may cause an allergic reaction similar to poison ivy. Susceptibility and the severity of a reaction varies with the individual. Although most people are not sensitive to WEST SYSTEM Resins and Hardeners, the risk of becoming sensitized increases with repeated contact. For those who become sensitized, the severity of the reaction may increase with each contact. The hazards associated with resins and hardeners also apply to the sanding dust from epoxy that has not fully cured. These hazards decrease as resin/hardener mixtures reach full cure. Refer to product labels or Material Safety Data Sheets for specific product warnings and safety information.

Precautions

1. Avoid contact with resin, hardeners, mixed epoxy and sanding dust from epoxy that is not fully cured. Wear protective gloves and clothing whenever you handle WEST SYSTEM Epoxies. Barrier skin creams provide additional protection. If you do get resin, hardener or mixed epoxy on your skin, remove it as soon as possible. Resin is not water soluble—use a waterless skin cleanser to remove resin or mixed epoxy from your skin. Hardener is water soluble—wash with soap and warm water to remove hardener or sanding dust from your skin. Always wash thoroughly with soap and warm water after using epoxy. Never use solvents to remove epoxy from your skin.
   Stop using the product if you develop a reaction. Resume work only after the symptoms disappear, usually after several days. When you resume work, improve your safety precautions to prevent exposure to epoxy, its vapors, and sanding dust. If problems persist, discontinue use and consult a physician.
2. Protect your eyes from contact with resin, hardeners, mixed epoxy, and sanding dust by wearing appropriate eye protection. If contact occurs, immediately flush the eyes with water under low pressure for 15 minutes. If discomfort persists, seek medical attention.
3. Avoid breathing concentrated vapors and sanding dust. WEST SYSTEM epoxies have low VOC content, but vapors can build up in unvented spaces. Provide ample ventilation when working with epoxy in confined spaces, such as boat interiors. When adequate ventilation is not possible, wear a NIOSH (National Institute for Occupational

Safety and Health) approved respirator with an organic vapor cartridge. Provide ventilation and wear a dust mask when sanding epoxy, especially uncured epoxy. Breathing uncured epoxy dust increases your risk of sensitization. Although epoxy cures quickly to a sandable solid, it may take over two weeks at room temperature, or post-curing, to cure completely.

4. Avoid ingestion. Wash thoroughly after handling epoxy, especially before eating or smoking. If epoxy is swallowed, drink large quantities of water—DO NOT induce vomiting. Because hardeners are corrosive, they can cause additional harm if vomited. Call a physician immediately. Refer to First Aid procedures on the Material Safety Data Sheet.
5. KEEP RESINS, HARDENERS, FILLERS AND SOLVENTS OUT OF THE REACH OF CHILDREN.
For additional safety information or data, write to: EPOXY SAFETY, Gougeon Brothers, Inc., PO Box 908, Bay City, MI 48707 USA or visit www.westsystem.com.

8.1.1 Cleanup

Contain large spills with sand, clay or other inert absorbent material. Use a scraper to contain small spills and collect as much material as possible. Follow up with absorbent towels. Uncontaminated resin or hardener may be reclaimed for use. DO NOT use saw dust or other fine cellulose materials to absorb hardeners. DO NOT dispose of hardener in trash containing saw dust or other fine cellulose materials—spontaneous combustion can occur.

Clean resin or mixed epoxy residue with lacquer thinner, acetone or alcohol. Follow all safety warnings on solvent containers. Clean hardener residue with warm soapy water. Clean 207 Hardener residue with alcohol.

Dispose of resin, hardener and empty containers safely. Puncture a corner of the can and drain residue into the appropriate new container of resin or hardener. DO NOT dispose of resin or hardener in a liquid state. Waste resin and hardener can be mixed and cured (in small quantities) to a non-hazardous inert solid.

CAUTION! Pots of curing epoxy can get hot enough to ignite surrounding combustible materials and give off hazardous fumes. Place pots of mixed epoxy in a safe and ventilated area, away from workers and combustible materials. Dispose of the solid mass only if curing is complete and the mass has cooled. Follow federal, state or local disposal regulations.

8.2 Epoxy products

This section provides a short description of WEST SYSTEM resin, hardeners and fillers. Refer to the current *User Manual & Product Guide* for complete information on all WEST SYSTEM products.

8.2.1 Resin and hardeners

Resin

105 Resin—A clear, light-amber, low-viscosity, epoxy resin that can be cured in a wide temperature range to yield a high-strength, rigid solid which has excellent cohesive properties and is an outstanding bonding adhesive and moisture vapor barrier. WEST SYSTEM 105 Resin is formulated for use with four different WEST SYSTEM hardeners. Use the Hardener Selection Guide *(Figure 8-1)* to select the hardener most suited for your application.

Hardeners

205 Hardener—Used for general bonding, barrier coating and fabric application. Formulated to cure at lower temperatures and to produce a rapid cure that develops its physical properties quickly at room temperature. 5:1 mix ratio.

206 Slow Hardener—Used for general bonding, barrier coating and fabric application. Formulated for a longer working and cure time or to provide adequate working time at higher temperatures. 5:1 mix ratio.

Note: 205 Fast and 206 Slow Hardener may be blended for intermediate cure times. Always maintain the proper 5 part resin to 1 part hardener ratio. Do not mix 205 or 206 (5-to-1 ratio) Hardeners with 207 or 209 (3-to-1 ratio) Hardeners.

207 Special Coating Hardener—Formulated specifically for barrier coating and fabric application where *clear finish* is desired. 207 contains a UV stabilization additive, but still requires long term UV protection with paint or varnish. It provides good physical properties for bonding, but it is more difficult to thicken and less cost effective for this purpose than 205 or 206 hardener. 207 is a light amber color that will tint wood slightly darker and warmer, similar to varnish. 3:1 mix ratio.

209 Extra Slow Hardener— Used for general bonding, barrier coating and fabric application in extremely warm and/or humid conditions. Provides approximately twice the pot life and working time as 206 Slow Hardener and adequate pot life up to 110°F (43°C). Also used at room temperatures when a long pot life and working time are required. 3:1 mix ratio.

Hardener Selection Guide

HARDENER	RESIN/HARDENER USE	HARDENER TEMPERATURE RANGE (°F)*	CURE SPEEDS at room temperature*		
		Room Temp. 40° 50° 60° 70° 80° 90° 100°	POT LIFE 100g cupful	OPEN TIME thin film	CURE TO SOLID thin film
205	General bonding, fabric application and barrier coating		9–12 minutes	60–70 minutes	6–8 hours
206	General bonding, fabric application and barrier coating		20–25 minutes	90–110 minutes	10–15 hours
207	Clear fabric application and coating		22–27 minutes	110–130 minutes	12–18 hours
209	General bonding, fabric application and barrier coating		40–50 minutes	3–4 hours	20–24 hours

*Epoxy cures faster in warmer temperatures and in thicker applications—Epoxy cures slower in cooler temperatures and in thinner applications.

Figure 8-1 *Select a hardener for its intended use and for the cure speed best suited for your job, in the temperature range you are working in.*

8.2.2 Fillers

Throughout this manual, we will refer to *epoxy* or *resin/hardener mixture*, meaning mixed resin and hardener without fillers added; and *thickened mixture* or *thickened epoxy*, meaning resin/hardener with one of six fillers added.

Fillers are used to thicken the epoxy for specific applications. They are categorized as either **Adhesive Fillers**—used for structural bonding or gluing, and gap-filling; or **Fairing Fillers**—used for cosmetic surface filling. Although each filler has unique handling and cured characteristics that make it more suitable for some jobs than others *(Figure 8-2)*, for *most* bonding applications any of the adhesive fillers can be used. And for *most* surface filling, either of the fairing fillers can be used. Fillers may also be blended for intermediate characteristics.

Adhesive fillers

403 Microfibers—For general bonding and gap filling. Epoxy/403 mixtures have superior gap-filling qualities and good strength for most bonding applications while retaining wetting/penetrating capabilities. Works especially well with porous woods. Cures to an off-white color.

404 High-Density Filler—For hardware fastener bonding and applications that require maximum physical properties and where high-cyclic loads are anticipated. Also used for gap-filling where maximum strength is necessary. Cures to an off-white color.

405 Filleting Blend—For use in bonding and filleting on naturally finished wood projects. A strong, wood-toned filler that mixes easily and spreads smoothly. Cures to a brown color and can be used to tint other fillers.

406 Colloidal Silica—For general bonding, gap-filling, high-strength bonds and fillets. A practical and versatile, smooth-textured filler. It can be used alone or mixed with other fillers to improve workability and smoothness. Cures to an off-white color.

Fairing fillers

407 Low-Density Filler—A blended microballoon-based filler used to make a fairing compound that is easy to sand or carve while still being reasonably strong on a strength-to-weight basis. Cures to a reddish-brown color.

410 Microlight™—A very low-density filler for creating a light, easily-worked fairing compound. 410 spreads smoothly and sands very easily when cured. Not recommended under dark colored paint or on other surfaces subject to high temperatures. Cures to a light tan color.

See Appendix —Estimating Guides for WEST SYSTEM products, for additional filler selection information.

Filler Selection Guide

USES Resin/Hardener mixture thickened with a Filler Use description—Desired characteristics	ADHESIVE FILLERS Highest density Highest strength				FAIRING FILLERS Lowest density Easiest sanding	
	404 High-density	**406** Colloidal Silica	**403** Microfibers	**405** Filleting Blend	**407** Low-density	**410** Microlight™
Bonding Hardware—Increased fastener interface and hardware load capability—Maximum strength	★★★★	★★★	★★★	★★		
General Bonding—Join parts with epoxy thickened to create a structural gap filler—Strength/gap filling	★★★	★★★	★★★	★★	★	
Bonding with Fillets—Increase joint bonding area and create a structural brace between parts—Smoothness/strength	★★	★★★★	★★	★★★	★★★	
Laminating—Bond layers of wood strips, veneers, planks, sheets and cores—Gap filling/strength	★★	★★★	★★★★	★★	★★	
Fairing—Fill low areas and voids with an easily shaped and sanded surface filler/fairing compound—Sandability/gap filling					★★★	★★★★

Figure 8-2 *Selecting Fillers—As a rule, use* ***higher-density fillers*** *when bonding* ***higher-density materials*** *such as hardwoods and metals. Any of the adhesive fillers are suitable for most bonding situations. Your choice of a filler for general use may be based on the handling characteristics you prefer. Fillers may also be blended to create mixtures with intermediate characteristics.*

8.3 Handling epoxy

This section explains the fundamentals of epoxy curing and the steps for proper dispensing, mixing, and adding fillers to assure that every batch of epoxy cures to a useful high-strength solid.

8.3.1 Understanding epoxy's cure stages

Mixing epoxy resin and hardener begins a chemical reaction that transforms the combined liquid ingredients to a solid. The time it takes for this transformation is the **cure time**. As it cures the epoxy passes from the liquid state, through a gel state, before it reaches a solid state *(Figure 8-3)*.

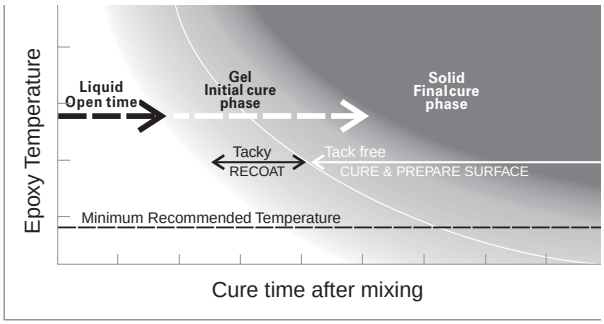

Figure 8-3 *As it cures, mixed epoxy passes from a liquid state, through a gel state, to a solid state. Cure time is shorter when the epoxy is warmer. Cure time is longer when the epoxy is cooler.*

1. Liquid—Open time

Open time (also working time or wet lay-up time) is the portion of the cure time, after mixing, that the resin/hardener mixture remains a *liquid* and is workable and suitable for application. All assembly and clamping should take place during the open time to assure a dependable bond.

2. Gel—Initial cure

The mixture passes into an initial cure phase (also called the green stage) when it begins to *gel*, or "kick off". The epoxy is no longer workable and will no longer feel tacky. During this stage it progresses from a soft gel consistency to the firmness of hard rubber. You will be able to dent it with your thumb nail.

The mixture will become tack free about midway through the initial cure phase. While it is still tacky, a new application of epoxy will still chemically link with it, so the surface may still be bonded to or recoated *without special preparation*. However, this ability diminishes as the mixture approaches the final cure phase.

3. Solid—Final cure

The epoxy mixture has cured to a *solid* state and can be dry sanded and shaped. You should not be able to dent it with your thumbnail. At this point the epoxy has reached most of its ultimate strength, so clamps can be removed. It will continue to cure over the next several days at room temperature.

A new application of epoxy will no longer chemically link to it, so the surface of the epoxy *must be properly prepared and sanded* before recoating to achieve a good mechanical, secondary bond. *See Surface Preparation 8.4.1.*

8.3.2 Understanding and controlling cure time

Open time and cure time govern much of the activity of building and repairing with epoxy. Open time dictates the time available for mixing, application, smoothing, shaping, assembly and clamping. Cure time dictates how long you must wait before removing

clamps, or before you can sand or go on to the next step in the project. Two factors determine an epoxy mixture's open time and overall cure time—*hardener cure speed* and *epoxy temperature*.

Hardener speed

Each hardener has an ideal temperature cure range *(Figure 8-1)*. At any given temperature, each resin/hardener combination will go through the same cure stages, but at different rates. Select the hardener that gives you adequate working time for the job you are doing at the temperature and conditions you are working under. The product guide and container labels describe hardener pot lives and cure times.

Pot life is a term used to compare the cure speeds of different hardeners. It is the amount of time a specific mass of mixed resin and hardener remains a liquid at a specific temperature. (A 100g-mass mixture in a standard container, at 72°F). Because pot life is a measure of the cure speed of a specific contained mass (volume) of epoxy rather than a thin film, a hardener's pot life is much shorter than its open time.

Epoxy temperature

The warmer the temperature of curing epoxy, the faster it cures *(Figure 8-3)*. Curing epoxy's temperature is determined by the *ambient temperature* plus the *exothermic heat* generated by its cure.

Ambient temperature is the temperature of the air or material in contact with the epoxy. Air temperature is most often the ambient temperature unless the epoxy is applied to a surface with a different temperature. Generally, epoxy cures faster when the air temperature is warmer.

Exothermic heat is produced by the chemical reaction that cures epoxy. The amount of heat produced depends on the thickness or exposed surface area of mixed epoxy. In a thicker mass, more heat is retained, causing a faster reaction and more heat. The mixing container shape and mixed quantity have a great affect on this exothermic reaction. A contained mass of curing epoxy (8 fl. oz. or more) in a plastic mixing cup can quickly generate enough heat to melt the cup and burn your skin. However, if the same quantity is spread into a thin layer, exothermic heat is dissipated, and the epoxy's cure time is determined by the ambient temperature. The thinner the layer of curing epoxy, the less it is affected by exothermic heat, and the slower it cures.

Controlling cure time

In warm conditions use a slower hardener, if possible. Mix smaller batches that can be used up quickly, or quickly pour the epoxy mixture into a container with greater surface area (a roller pan, for example), thereby allowing exothermic heat to dissipate and extending open time. The sooner the mixture is transferred or applied (after thorough mixing), the more of the mixture's useful open time will be available for coating, lay-up or assembly.

In cool conditions use a faster hardener or use supplemental heat to raise the epoxy temperature above the hardeners minimum recommended application temperature. Use a hot air gun, heat lamp or other heat source to warm the resin and hardener before mixing or after the epoxy is applied. At room temperature, supplemental heat is useful when a quicker cure is desired. NOTE! Unvented kerosene or propane heaters can inhibit the cure of epoxy and contaminate epoxy surfaces with unburned hydrocarbons.

CAUTION! Heating epoxy that has not gelled will lower its viscosity, allowing the epoxy to run or sag more easily on vertical surfaces. In addition, heating epoxy applied to a porous substrate (soft wood or low density core material) may cause the substrate to "out-gas" and form bubbles in the epoxy coating. To avoid outgassing, wait until the epoxy coating has gelled before warming it. Never heat mixed epoxy in a liquid state over 120°F (49°C).

Regardless of what steps are taken to control the cure time, thorough planning of the application and assembly will allow you to make maximum use of the epoxy mixture's open time and cure time.

8.3.3 Dispensing and mixing

Careful measuring of epoxy resin and hardener and thorough mixing are essential for a proper cure. Whether the resin/hardener mixture is applied as a coating or modified with fillers or additives, observing the following procedures will assure a controlled and thorough chemical transition to a high-strength epoxy solid.

Dispense the proper proportions of resin and hardener into a clean plastic, metal or wax-free paper container. Don't use glass or foam containers because of the potential danger from exothermic heat buildup. DO NOT attempt to alter the cure time by altering the ratio. An accurate ratio is essential for a proper cure and full development of physical properties.

Dispensing with Mini pumps

Most problems related to curing of the epoxy can be traced to the wrong ratio of resin and hardener. To simplify metering, we recommend using calibrated WEST SYSTEM Mini Pumps to dispense the resin and hardener. 301 Mini Pumps and 303 Special Ratio Mini Pumps are calibrated to deliver the proper working ratio of resin to hardener.

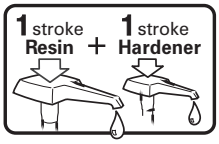

Pump one full pump stroke of resin for each one full pump stroke of hardener. Depress each pump head fully and allow the head to come completely back to the top before beginning the next stroke *(Figure 8-4)*. Partial strokes will give the wrong ratio. Read the pump instructions before using pumps.

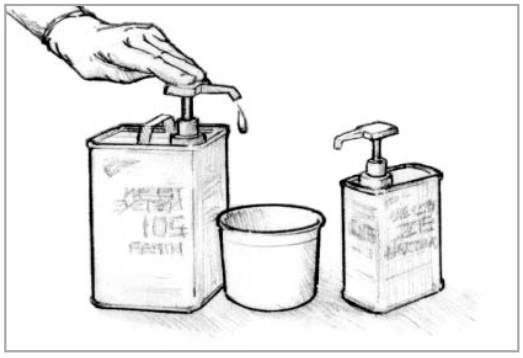

Figure 8-4 *Dispense the proper proportions of resin and hardener.*

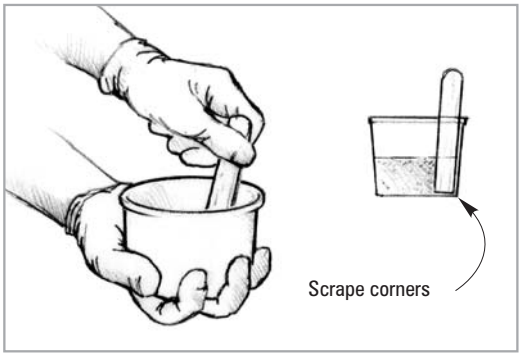

Figure 8-5 *Stir resin and hardener together thoroughly, at least one minute—longer in cooler temperatures.*

Before you use the first mixture on a project, verify the proper ratio according to the instructions that come with the pumps. Recheck the ratio anytime you experience problems with curing.

Dispensing without Mini Pumps—Weight/volume measure

To measure 105 Resin and 205 or 206 Hardener by weight or volume, combine 5 parts resin with 1 part hardener. To measure 105 Resin and 207 or 209 Hardener by volume, combine 3 parts resin with 1 part hardener (by weight, 3.5 parts resin–1 part hardener).

First time users—Begin with a small test batch to get the feel for the mixing and curing process before applying the mixture to your project. This will demonstrate the hardener's open time for the temperature you are working in and assure you that the resin/hardener ratio is metered properly. Mix small batches until you are confident of the mixture's handling characteristics.

Mixing

Stir the two ingredients together thoroughly, at least one minute—longer in cooler temperatures *(Figure 8-5)*. To assure thorough mixing, scrape the sides and bottom of the pot as you mix. Use the flat end of the mixing stick to reach the inside corner of the pot. If you are using a power mixer, occasionally scrape the sides and corners of the mixing pot while mixing.

If you are going to be using the mixture for coating, quickly pour it into a roller pan to extend the open time.

WARNING! Curing epoxy generates heat. Do not fill or cast layers of epoxy thicker than ½"—thinner if enclosed by foam or other insulated material. Several inches of mixed epoxy in a plastic mixing cup will generate enough heat to melt the cup if left to stand for its full pot life. For this reason, do not use foam or glass mixing containers. If a pot of mixed epoxy begins to exotherm (heat up), quickly move it outdoors. Avoid breathing the fumes. Do not dispose of the mixture until the reaction is complete and has cooled.

8.3.4 Adding fillers and additives

Fillers

After selecting an appropriate filler for your job *(Section 8.2.2)*, use it to thicken the epoxy mixture to the desired consistency. The thickness of a mixture required for a particular job is controlled by the amount of filler added. There is no strict formula or measuring involved—use your eye to judge what consistency will work best. Figure 8-6 gives you a general guide to the differences between unthickened epoxy and the three consistencies referred to in this manual.

Figure 8-6 *Epoxy can be thickened to the exact consistency needed for a particular job. The procedures in this manual refer to four common consistencies; syrup, catsup, mayonnaise and peanut butter.*

CONSISTENCY	Unthickened mixture.	Slightly thickened.	Moderately thickened.	Maximum thickness.
	SYRUP	CATSUP	MAYONNAISE	PEANUT BUTTER
GENERAL APPEARANCE				
CHARACTERISTICS	Drips off vertical surfaces.	Sags down vertical surfaces.	Clings to vertical surfaces–peaks fall over.	Clings to vertical surfaces–peaks stand up.
USES	Coating, "wetting-out" before bonding, applying fiberglass, graphite and other fabrics.	Laminating/bonding flat panels with large surface areas, injecting with a syringe.	General bonding, filleting, hardware bonding.	Gap filling, filleting, fairing, bonding uneven surfaces.

Always add fillers in a two-step process:

1. Mix the desired quantity of resin and hardener thoroughly before adding fillers. Begin with a small batch—allow room for the filler.
2. Blend in small handfuls or scoops of the appropriate filler until the desired consistency is reached *(Figure 8-7)*.

   For maximum strength, add only enough filler to completely bridge gaps between surfaces without sagging or running out of the joint or gap. A small amount should squeeze out of joints when clamped. For thick mixtures, don't fill the mixing cup more than 1/3 full of epoxy before adding filler. When making fairing compounds, stir in as much 407 or 410 as you can blend in smoothly—for easy sanding, the thicker the better. Be sure all of the filler is thoroughly blended before the mixture is applied.

Figure 8-7 *Blend in small handfuls or scoops of the appropriate filler until the desired consistency is reached.*

Additives

Additives are used to give epoxy additional physical properties when used as a coating. Although additives are blended with mixed epoxy in the same two-step process as fillers, they are not designed to thicken the epoxy. Follow the mixing instructions on the individual additive containers.

8.3.5 Removing epoxy

Removing uncured or non-curing epoxy. Removed uncured epoxy as you would spilled resin. Scrape as much material as you can from the surface using a stiff metal or plastic scraper—warm the epoxy to lower its viscosity. Clean the residue with lacquer thinner, acetone, or alcohol. Follow safety warnings on solvents and provide adequate ventilation. After recoating wood surfaces with epoxy, it's a good idea to brush the wet epoxy (in the direction of the grain) with a wire brush to improve adhesion. Allow solvents to dry before recoating.

Removing fiberglass cloth applied with epoxy. Use a heat gun to heat and soften the epoxy. Start in a small area near a corner or an edge. Apply heat until you can slip a putty knife or chisel under the cloth (about 200°F). Grab the edge with a pair of pliers and pull up on the cloth while heating just ahead of the separation. On large areas, use a utility knife to score the glass and remove in narrower strips. Resulting surface texture may be coated or remaining epoxy may be removed as follows.

Removing cured epoxy coating. Use a heat gun to soften the epoxy (200°F). Heat a small area and use a paint or cabinet scraper to remove the bulk of the coating. Sand the surface to remove the remaining material. Provide ventilation when heating epoxy.

8.4 Basic techniques

The following basic techniques are common to most repair or building projects, regardless of the type of structure or material you are working with.

8.4.1 Surface preparation

Whether you are bonding, fairing or applying fabrics, the success of the application depends not only on the strength of the epoxy, but also on how well the epoxy adheres to the surface to which it is being applied. Unless you are bonding to partially cured epoxy, the strength of the bond relies on the epoxy's ability to mechanically "key" into the surface. That is why the following three steps of surface preparation are a critical part of any secondary bonding operation.

For good adhesion, bonding surfaces should be:

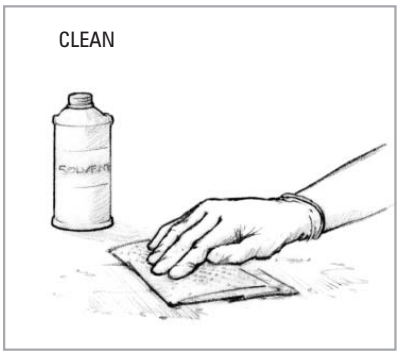

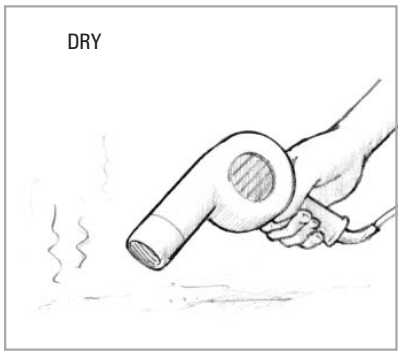

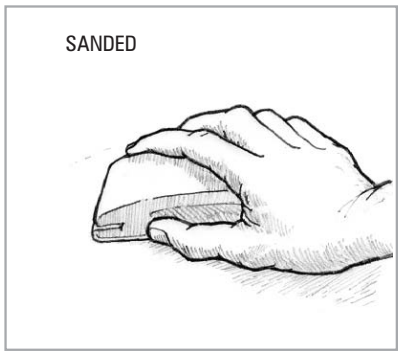

1. Clean

Bonding surfaces must be free of any contaminants such as grease, oil, wax or mold release. Clean contaminated surfaces with lacquer thinner, acetone or other appropriate solvent. Wipe the surface with paper towels before the solvent dries. Clean surfaces *before* sanding to avoid sanding the contaminant into the surface. Follow all safety precautions when working with solvents.

2. Dry

All bonding surfaces must be as dry as possible for good adhesion. If necessary, accelerate drying by warming the bonding surface with hot air guns, hair dryers or heat lamps. Use fans to move the air in confined or enclosed spaces. Watch for condensation when working outdoors or whenever the temperature of the work environment changes.

3. Sanded

Sand smooth non-porous surfaces—thoroughly abrade the surface. For most surfaces, 80-grit aluminum oxide paper will provide a good texture for the epoxy to "key" into. Be sure the surface to be bonded is solid. Remove any flaking, chalking, blistering, or old coating before sanding. Remove all dust after sanding.

Special preparation for various materials

Cured epoxy—Amine blush can appear as a wax-like film on cured epoxy surfaces. It is a byproduct of the curing process and may be more noticeable in cool, moist conditions. Amine blush can clog sandpaper and inhibit subsequent bonding, but it can easily be removed. It's a good idea to assume it has formed on any cured epoxy surface.

To remove the blush, wash the surface with clean water (not solvent) and an abrasive pad, such as Scotch-brite™ 7447 General Purpose Hand Pads. Dry the surface with paper towels to remove the dissolved blush before it dries on the surface. Sand any remaining glossy areas with 80-grit sandpaper. Wet-sanding will also remove the amine blush. If a release fabric is applied over the surface of fresh epoxy, all amine blush will be removed when the release fabric is peeled from the cured epoxy and no additional sanding is required.

Epoxy surfaces that have not fully cured may be bonded to or coated *with epoxy* without washing or sanding. Before applying *coatings other than epoxy* (paints, bottom paints, varnishes, gelcoats, etc.), allow epoxy surfaces to cure fully, then wash and sand.

Hardwoods—Sand with 80-grit paper. (Sand white oak with 60-grit.)

Teak/oily woods—Wipe with acetone 15 minutes before coating. The solvent dries the oil at the surface and allows epoxy to penetrate. Be sure the solvent has evaporated before coating.

Porous woods—No special preparation needed. If surface is burnished, possibly by dull planer blades, sand with 80-grit paper to open pores.

Steel, lead—Remove contamination, sand or grind to bright metal, coat with epoxy then sand fresh epoxy into surface. Recoat or bond after first coat gels.

Aluminum—Sand and prepare with 860 Aluminum Etch Kit.

Polyester (fiberglass)—Clean contamination with a silicone and wax remover such as DuPont Prep-Sol™ 3919S. Sand with 80-grit paper to a dull finish.

Plastic—Adhesion varies. If a plastic is impervious to solvents such as acetone, epoxy generally will not bond to it. Soft, flexible plastics such as polyethylene, polypropylene, nylon, Plexiglas and polycarbonate fall into this category.

Hard, rigid plastics such as PVC, ABS and styrene provide better adhesion with good surface preparation and adequate bonding area. After sanding, flame oxidizing (by quickly passing propane torch over the surface without melting the plastic) can improve bonding in some plastics. Its a good idea to conduct an adhesion test on a plastic that you are uncertain about.

8.4.2 Bonding (gluing)

This section refers to two types of structural bonding. Two-step bonding is the preferred method for most situations because it promotes maximum epoxy penetration into the bonding surface and prevents resin-starved joints. Single-step bonding can be used when joints have minimal loads and excess absorption into porous surfaces is not a problem. In both cases, epoxy bonds best when it is worked into the surface with a roller or brush

Wet out— To Precoat a joint's bonding surfaces with unthickened epoxy for maximum penetration and adhesion before an additional coat of thickened epoxy is applied. Especially useful and recommended on porous surfaces.

NOTE: Joint strength—the ability to adequately transfer a load from one part to another—depends on the combined effects of three factors. GLUE STRENGTH—Careful metering and thorough mixing will assure the epoxy mixture cures to full strength. SURFACE PREPARATION—For the best adhesion and load transfer the surface must be properly prepared. JOINT AREA—The bonding area, or adhesive area, of the joint must be adequate for the load on the joint. Increased overlap, scarf joints, fillets and reinforcing fibers across the joint can be used to increase bonding area.

Before mixing epoxy, check all parts to be bonded for proper fit and surface preparation *(Surface preparation—8.4.1)*, gather all the clamps and tools necessary for the operation, and cover any areas that need protection from spills.

Two-step bonding

1. Wet-out bonding surfaces—Apply a neat resin/hardener mixture (without fillers) to the surfaces to be joined *(Figure 8-8)*. Wet out small or tight areas with a disposable brush. Wet out larger areas with a foam roller or by spreading the resin/hardener mixture evenly over the surface with a plastic spreader. You may proceed with step two immediately or any time before the wet-out coat becomes tack free.

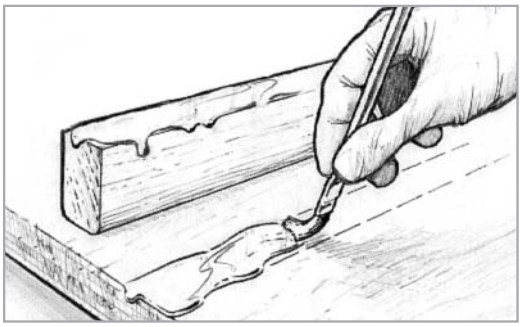

Figure 8-8 *Wet out the bonding surfaces by applying resin/hardener mixture with a brush or roller.*

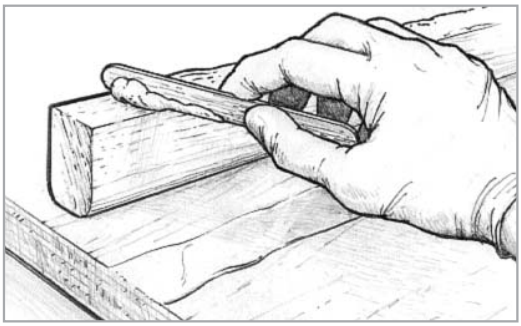

Figure 8-9 *Apply thickened epoxy to one of the bonding surfaces.*

2. Apply thickened epoxy to one bonding surface. Modify the resin/hardener mixture by stirring in the appropriate filler until it becomes thick enough to bridge any gaps between the mating surfaces and to prevent "resin-starved" joints. Apply enough of the mixture to one of the surfaces, so that a small amount will squeeze out when the surfaces are joined together with a force equivalent to a firm hand grip *(Figure 8-9)*.

   Thickened epoxy can be applied immediately over the wet-out surface or any time before the wet-out is no longer tacky. For most small bonding operations, add the filler to the resin/hardener mixture remaining in the batch that was used for the wet-out. Mix enough resin/hardener for both steps. Add the filler quickly after the surface is wet out and allow for a shorter working life of the mixture.

3. Clamp components. Attach clamps as necessary to hold the components in place. Use just enough clamping pressure to squeeze a small amount of the epoxy mixture from the joint, indicating that the epoxy is making good contact with both mating surfaces *(Figure 8-10)*. Avoid using too much clamping pressure, which can squeeze all of the epoxy mixture out of the joint.

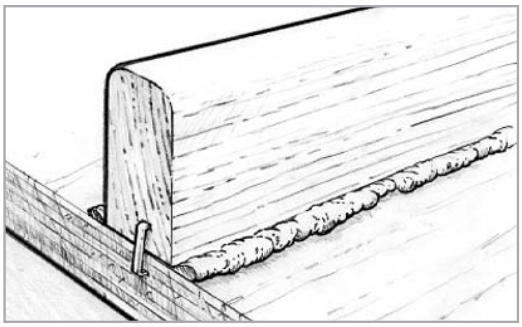

Figure 8-10 *Clamp components in place before the epoxy gels.*

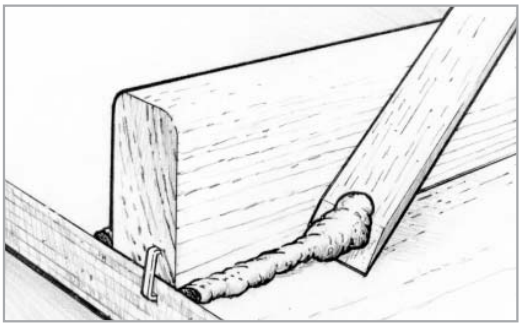

Figure 8-11 *Remove or shape excess epoxy that squeezes out of the joint.*

4. Remove or shape excess adhesive that squeezes out of the joint as soon as the joint is secured with clamps. A wooden mixing stick with one end sanded to a chisel edge is an ideal tool for removing the excess *(Figure 8-11)*.

   Single-step bonding

   Single-step bonding is applying the thickened epoxy directly to both bonding surfaces without first wetting out the surfaces with neat resin/hardener. We recommend that you thicken the epoxy no more than is necessary to bridge gaps in the joint (the thinner the mixture, the more it can penetrate the surface) and that you do not use this method for highly-loaded joints or for bonding end grain or other porous surfaces.

Laminating

The term "laminating" refers to the process of bonding numbers of relatively thin layers, like plywood, veneers, fabrics or core material to create a composite. A composite may be any number of layers of the same material or combinations of different materials. Methods of epoxy application and clamping will differ depending on what you are laminating.

Because of large surface areas and limitations of wet lay-up time, roller application is the most common method for applying epoxy. A faster method for large surfaces is to simply pour the resin/hardener mixture onto the middle of the panel and spread the mixture evenly over the surface with a plastic spreader. Apply thickened mixtures with an 809 Notched Spreader.

Using staples or screws is the most common method of clamping when you laminate a solid material to a solid substrate. An even distribution of weights will work when you are laminating a solid material to a base that will not hold staples or screws, such as a foam or honeycomb core material.

Vacuum bagging is the ideal clamping method for laminating a wide range of materials. Through the use of a vacuum pump and plastic sheeting, the atmosphere is used to apply perfectly even clamping pressure over all areas of a panel regardless of the size, shape or number of layers. *For detail information on vacuum bagging, refer to 002-150 Vacuum Bagging Techniques.*

8.4.3 Bonding with fillets

A fillet (fil'it) is a cove-shaped application of thickened epoxy that bridges an inside corner joint. It is excellent for bonding parts because it increases the surface area of the bond and serves as a structural brace. All joints that will be covered with fiberglass cloth will require a fillet to support the cloth at the inside corner of the joint.

The procedure for bonding with fillets is the same as normal bonding except that instead of removing the squeezed-out thickened epoxy after the components are clamped in position, you shape it into a fillet. For larger fillets, add thickened mixture to the joint as soon as the bonding operation is complete, before the bonding mixture becomes tack free, or any time after the final cure and sanding of exposed epoxy in the fillet area.

1. Bond parts as described in 8.4.2 Bonding.
2. Shape and smooth the squeezed-out thick epoxy into a fillet by drawing a rounded filleting tool (mixing stick) along the joint, dragging excess material ahead of the tool and leaving a smooth cove-shaped fillet bordered on each side by a clean margin. Some excess filleting material will remain outside of the margin *(Figure 8-12)*. Use the excess material to re-fill any voids. Smooth the fillet until you are satisfied with its appearance. A mixing stick will leave a fillet with about a ⅜" radius. For larger fillets, an 808 Flexible Spreader, cut to shape or bent to the desired radius, works well.

   Apply additional thickened epoxy to fill voids or make larger fillets. Apply the mixture along the joint line with the rounded mixing stick, using enough mixture to create the desired size of fillet. For longer or multiple fillets, empty caulking gun cartridges or disposable cake decorating bags can be used. Cut the plastic tip to lay a bead of thickened epoxy large enough for the desired fillet size. Heavy duty, sealable food storage bags with one corner cut off may also be used.

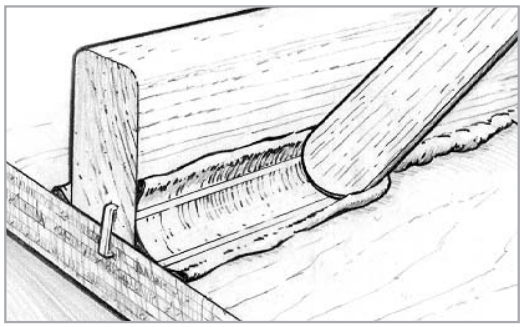

Figure 8-12 *Shape and smooth the fillet with a rounded filleting tool.*

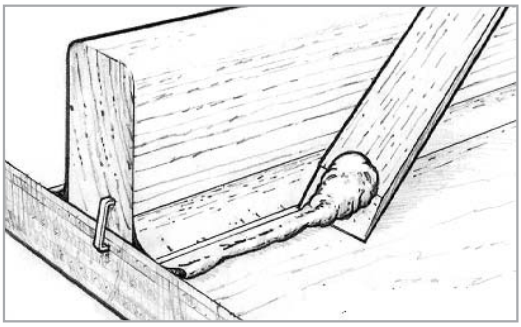

Figure 8-13 *Clean up the excess epoxy outside of the fillet margin.*

3. Clean up the remaining excess material outside of the margin by using a sharpened mixing stick or a putty knife *(Figure 8-13)*. Fiberglass cloth or tape may be applied over the fillet area before the fillet has cured (or after the fillet is cured and sanded).
4. Sand smooth with 80-grit sandpaper after the fillet has fully cured. Wipe the surface clean of any dust and apply several coats of resin/hardener over the entire fillet area before final finishing.

8.4.4 Fairing

Fairing refers to the filling and shaping of low areas so they blend with the surrounding surfaces and appear "fair" to the eye and touch. After major structural assembly has been completed, final fairing can be easily accomplished with WEST SYSTEM epoxy and 407 or 410 low-density fillers.

1. Prepare the surface as you would for bonding (Section 8.4.1). Sand smooth any bumps or ridges on the surface and remove all dust from the area to be faired.
2. Wet out porous surfaces with unthickened epoxy *(Figure 8-14)*.
3. Mix resin/hardener and 407 Low-Density or 410 Microlight™ filler to a peanut butter consistency.

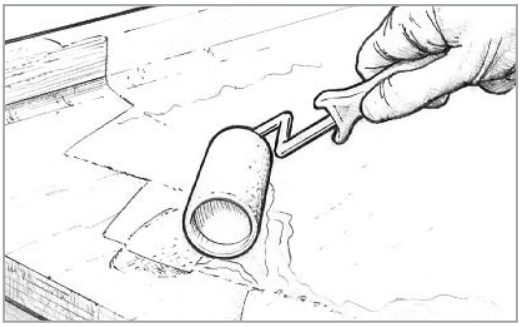

Figure 8-14 *Wet out porous surfaces before applying thickened fairing compound.*

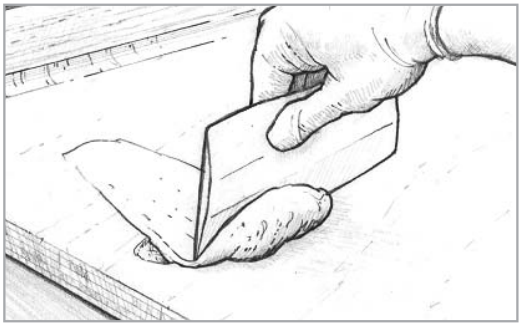

Figure 8-15 *Trowel the thickened epoxy fairing compound into the voids and depressions with a plastic spreader.*

4. Trowel on the thickened epoxy mixture with a plastic spreader, working it into all voids and depressions. Smooth the mixture to the desired shape, leaving the mixture slightly higher than the surrounding area *(Figure 8-15)*. Remove any excess thickened epoxy before it cures. If the voids you are filling are over ½" deep, apply the mixture in several applications or use 206 Slow Hardener or 209 Extra Slow Hardener, depending on ambient temperature.
5. Allow the final thickened epoxy application to cure thoroughly.
6. Sand the fairing material to blend with the surrounding contour *(Figure 8-16)*. Begin with 50-grit sandpaper if you have a lot of fairing material to remove. Use 80-grit paper on the appropriate sanding block when you are close to the final contour.
   CAUTION! Don't forget your dust mask. Remove the sanding dust and fill any remaining voids following the same procedure.

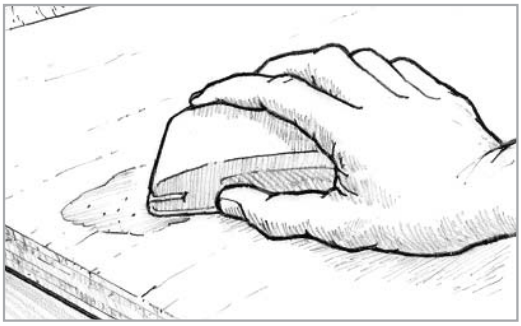

Figure 8-16 *Sand the fairing material to blend with the surrounding contour.*

7. Apply several coats of resin/hardener to the area with a disposable brush or roller after you are satisfied with the fairness. Allow the final coat to cure thoroughly before final sanding and finishing.

8.4.5 Applying woven cloth and tape

Fiberglass cloth is applied to surfaces to provide reinforcement and/or abrasion resistance, or in the case of Douglas Fir plywood, to prevent grain checking. It is usually applied after fairing and shaping are completed, and before the final coating operation. It is also applied in multiple layers (laminated) and in combination with other materials to build composite parts.

Fiberglass cloth may be applied to surfaces by either of two methods. The "dry" method refers to applying the cloth over a dry surface. The "wet" method refers to applying the cloth to an epoxy-coated surface often after the wet-out coat becomes tacky, which helps it cling to vertical or overhead surfaces. Since this method makes it more difficult to position the cloth, the dry method is the preferred method especially with thinner cloth.

Dry method

1. Prepare the surface as you would for bonding (Section 8.4.1).
2. Position the cloth over the surface and cut it several inches larger on all sides. If the surface area you are covering is larger than the cloth size, allow multiple pieces to overlap by approximately two inches. On sloped or vertical surfaces, hold the cloth in place with masking or duct tape, or with staples.
3. Mix a small quantity of epoxy (three or four pumps each of resin and hardener).
4. Pour a small pool of resin/hardener near the center of the cloth.
5. Spread the epoxy over the cloth surface with a plastic spreader, working the epoxy gently from the pool into the dry areas *(Figure 8-17)*. Use a foam roller or brush to wet out fabric on vertical surfaces. Properly wet out fabric is transparent. White areas indicate dry fabric. If you are applying the cloth over a porous surface, be sure to leave enough epoxy to be absorbed by both the cloth and the surface below it. Try to limit the amount of squeegeeing you do. The more you "work" the wet surface, the more minute air bubbles are placed in suspension in the epoxy. This is especially important if you plan to use a clear finish (see note page 70). You may use a roller or brush to apply epoxy to horizontal as well as vertical surfaces.

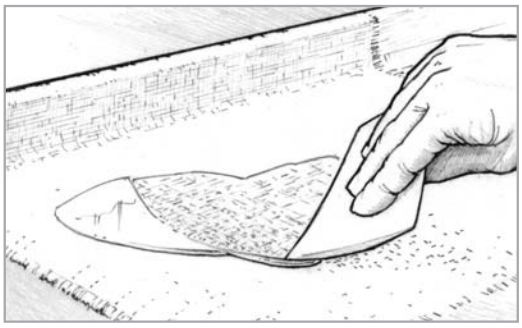

Figure 8-17 *Spread the epoxy from the center of the fabric toward the edges with a plastic spreader.*

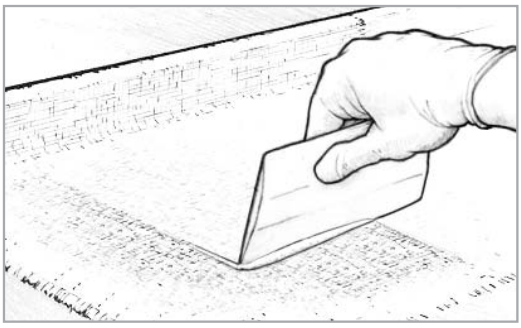

Figure 8-18 *Squeegee away excess epoxy before the first batch begins to gel.*

Smooth wrinkles and position the cloth as you work your way to the edges. Check for dry areas (especially over porous surfaces) and re-wet them as necessary before proceeding to the next step. If you have to cut a pleat or notch in the cloth to lay it flat on a compound curve or corner, make the cut with a pair of sharp scissors and overlap the edges for now.

NOTE: For clear wood finishes, an alternative wet out method is to lay the epoxy onto the fabric with a short-bristled brush. Dip the brush in the epoxy and lay the epoxy on the surface in a light even stroke. Don't force the epoxy into the cloth,which may trap air in the fabric and show through the clear finish. Apply enough epoxy to saturate the fabric and the wood below. After several minutes, lay on additional epoxy to dry (white) areas.

7. Squeegee away excess epoxy before the first batch begins to gel *(Figure 8-18)*. Drag the spreader over the fabric, using even-pressured, overlapping strokes. Use enough pressure to remove excess epoxy that would allow the cloth to float off the surface, but not enough pressure to create dry spots. Excess epoxy appears as a shiny area, while a properly wet-out surface appears evenly transparent, with a smooth, cloth texture. Later coats of epoxy will fill the weave of the cloth.

8. Trim the excess and overlapped cloth after the epoxy has reached its initial cure. The cloth will cut easily with a sharp utility knife *(Figure 8-19)*. Trim overlapped cloth, if desired, as follows:

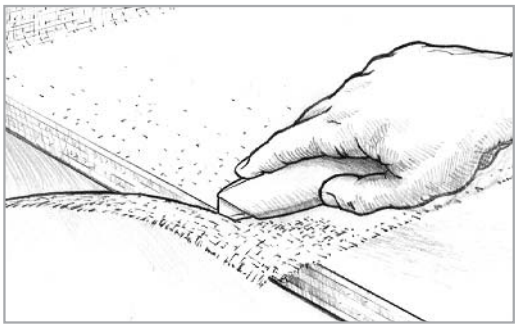

Figure 8-19 *Trim excess cloth when the epoxy reaches its initial cure phase. The wet-out cloth will be dry but flexible and will trim easily with a sharp utility knife.*

a) Place a metal straightedge on top of and midway between the two overlapped edges. **b)** Cut through both layers of cloth with a sharp utility knife *(Figure 8-20)*.

c) Remove the topmost trimming and then lift the opposite cut edge to remove the overlapped trimming *(Figure 8-21)*. **d)** Re-wet the underside of the raised edge with epoxy and smooth into place.

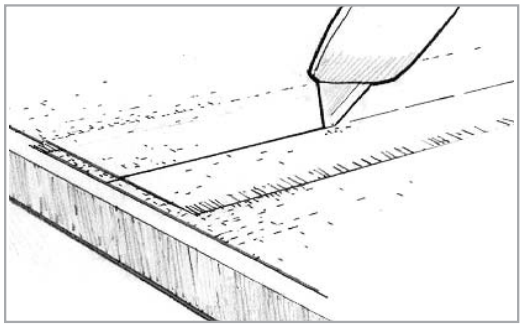

Figure 8-20 *Trim overlapping fabric using a metal straightedge and a sharp utility knife, for a flush butt joint.*

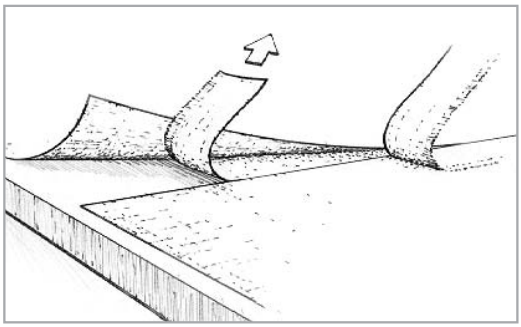

Figure 8-21 *Remove the topmost trimming. Then lift the opposite cut edge to remove the overlapped trimming.*

The result should be a near perfect butt joint, eliminating double cloth thickness. A lapped joint is stronger than a butt joint, so if appearance is not important, you may want to leave the overlap and fair in the unevenness after coating.

9. Coat the surface to fill the weave before the wet-out reaches its final cure stage *(Figure 8-22)*. Follow the procedures for epoxy barrier coating under Section 7.2. It will take

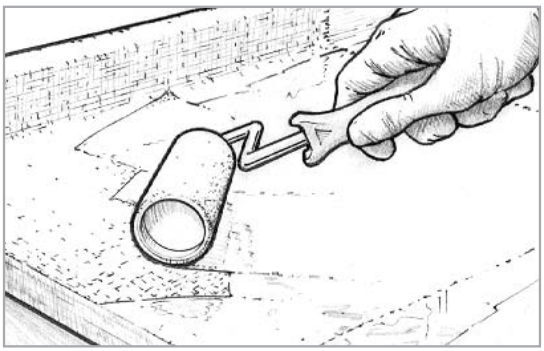

Figure 8-22 *Apply the first coat of unthickened epoxy to fill the weave of the cloth before the wet-out coat reaches its final cure phase.*

two or three coats to completely fill the weave of the cloth and to allow for a final sanding that will not affect the cloth.

Wet method

An alternative is to apply the fabric or tape to a surface coated with wet epoxy. As mentioned, this is not the preferred method, especially with large pieces of cloth, because of the difficulty removing wrinkles or adjusting the position of the cloth as it is being wet out. However, you may come across situations when this method may be useful or necessary.

1. Prepare the surface (Section 8.4.1).
2. Pre-fit and trim the cloth to size. Roll the cloth neatly so that it may be conveniently rolled back into position later.
3. Roll a heavy coat of epoxy on the surface.
4. Unroll the glass cloth over the wet epoxy and position it. Surface tension will hold most cloth in position. If you are applying the cloth vertically or overhead, you may want to wait until the epoxy becomes tacky. Work out wrinkles by lifting the edge of the cloth and smoothing from the center with your gloved hand or a spreader.
5. Apply a second coat of epoxy with a foam roller. Apply enough epoxy to thoroughly wet out the cloth.
6. Remove the excess epoxy with a spreader, using long overlapping strokes. The cloth should appear consistently transparent with a smooth cloth texture.
7. Follow steps 7, 8 and 9 under the dry method to finish the procedure.

   Any remaining irregularities or transitions between cloth and substrate can be faired by using an epoxy/filler fairing compound if the surface is to be painted. Any additional fairing done after the final coating should receive several additional coats over the faired area.

   Note: A third alternative, a variation of both methods, is to apply the fabric after a wet out coat has reached an initial cure. Follow the first three steps of the Wet Method, but wait until the epoxy cures dry to the touch before positioning the fabric and continuing with Step 3 of the Dry Method. Apply the fabric before the first coat reaches its final cure phase.

   Refer to Section 7, *Protecting and Maintaining Wooden Boats* for procedures on barrier coating and applying finish coatings.

WEST SYSTEM product estimating guides

Group size quantities and coating coverage

WEST SYSTEM epoxy resin and hardeners are packaged in three "Group Sizes." For each container size of resin, there is a corresponding sized container of hardener and a corresponding mini pump size. When purchasing resin, hardener and mini pumps, be sure all containers are labeled with the same Group Size letter (A, B or C).

Group Size	Resin quantity	Hardener quantity	Mixed quantity	Saturation Coat Porous Surfaces	Buildup Coats Non-Porous Surfaces
A	105-A 1 qt (.94 L)	205-A or 206-A .43 pt (.20 L)	1.2 qt. (1.15 L)	90–105 sq. ft. (8.5–10m²)	120–135 sq. ft. (11–12.5 m²)
		207-A or 209-A .66 pt (.31 L)	1.3 qt. (1.26 L)	90–105 sq. ft. (9–10 m²)	120–135 sq. ft. 11–13 m²)
B	105-B .98 gal (3.74 L)	205-B or 206-B .86 qt (.81 L)	1.2 gal. (4.55 L)	350–405 sq. ft. (32–37 m²)	462–520 sq. ft. (43–48 m²)
		207-B or 209-B 1.32 qt (1.24 L)	1.3 gal. (4.98 L)	370–430 sq. ft. (35–40 m²)	490–550 sq. ft. (45–50 m²)
C	105-C 4.35 gal (16.47 L)	205-C or 206-C .94 gal (3.58 L)	5.29 gal. (20 L)	1530–1785 sq. ft. (142–165 m²)	2040–2300 sq. ft. (190–213 m²)
		207-C or 209-C 1.45 gal (5.49 L)	5.8 gal. (21.9 L)	1675–1955 sq. ft. (155–180 m²)	2235–2520 sq. ft. (207–233 m²)

Fiberglass thickness per layer

Product number	740	742	729	745	737	738
Fabric weight	4 oz.	6 oz.	9 oz.	12 oz.	15 oz.	22 oz.
Single layer thickness*	.008"	.010"	.017"	.020"	.033"	.040"

Filler/epoxy proportion guide

Approximate mixed epoxy required to produce a catsup, mayonnaise or peanut butter consistency for the various sized filler products at 72°F. Mixtures will be thinner at higher temperatures.

Filler	Package size	Quantity of mixed epoxy required for		
		"Catsup" consistency	"Mayonnaise" consistency	"Peanut butter" consistency
403-9 403-28 403-B	6.0 oz 20.0 oz 20.0 lb	3.8 qt 3.2 gal 48.0 gal	2.5 qt 2.0 gal 32.0 gal	1.0 qt .9 gal 15.3 gal
404-15 404-45 404-B	15.2 oz 45.6 oz 30.0 lb	1.2 qt 3.6 qt 9.4 gal	.9 qt 2.8 qt 7.4 gal	.7 qt 2.0 qt 5.3 gal
405	8.0 oz	.9 qt	.7 qt	.6 qt
406-2 406-7 406-B	1.7 oz 5.5 oz 10.0 lb	1.3 qt 1.1 gal 27.0 gal	.9 qt 3.0 qt 16.0 gal	.5 qt 1.7 qt 6.0 gal
407-5 407-15 407-B	4.0 oz 12.0 oz 14.0 lb	.5 qt 1.7 qt 6.0 gal	.4 qt 1.3 qt 4.8 gal	.3 qt 1.0 qt 3.7 gal
410-2 410-7 410-B	2.0 oz 5.0 oz 4.0 lb	1.2 qt 3.0 qt 8.9 gal	.9 qt 2.4 qt 7.2 gal	.7 qt 1.8 qt 5.6 gal

Epoxy shelf life

If the containers are kept sealed when not in use WEST SYSTEM resin and hardeners should remain usable for many years. Over time, 105 Resin will thicken slightly and will therefore require extra care when mixing. Hardeners may darken with age, but physical properties are not affected by color. Mini Pumps may be left in containers during storage. It is a good idea, after a long storage to verify the metering accuracy of the pumps and mix a test batch to assure proper curing before applying epoxy to your project.

Problem solving guide

This guide is designed to help identify and prevent potential problems associated with using epoxy. If the solutions described here do not resolve the problem, call the Gougeon technical staff.

PROBLEM	POSSIBLE CAUSES	SOLUTION
The epoxy mixture has not cured after the recommended cure time has passed.	Off ratio-Too much or too little hardener will affect the cure time and thoroughness of the cure.	1. Remove epoxy. Do not apply additional material over non-curing epoxy. See 8.3.5 Removing epoxy. 2. Check correct number of pump strokes-use equal strokes of resin and hardener. DO NOT add extra hardener for faster cure! 3. Check pump ratio (see pump instructions). 4. Check for correct pump (5:1 or 3:1 ratio) and pump group size (Group B resin and Group B hardener).
	Low temperature- Epoxy mixtures cure slower at low temperatures.	1. Allow extra curing time in cool weather. 2. Apply heat to maintain the chemical reaction and speed the cure. 3. Use a faster hardener, designed to cure at lower temperatures.
	Insufficient mixing.	1. Remove epoxy. Do not apply additional material over non-curing epoxy. See 8.3.5 Removing epoxy. 2. Mix resin and hardener together thoroughly to avoid resin rich and hardener rich areas. 3. Add fillers or additives *after* resin and hardener have been thoroughly mixed.
	Incorrect products.	1. Remove epoxy. Do not apply additional material over non-curing epoxy. See 8.3.5 Removing epoxy. 2. Check for proper resin and hardener. Resin will not cure properly with other brands of hardener or with polyester catalysts.
Bond failure.	Insufficient cure.	See above.
	Resin starved joint-epoxy has wicked into porous surfaces leaving a void in the joint.	Wet out bonding surfaces before applying thickened epoxy. Re-wet very porous surfaces like end grain.
	Contaminated bonding surface.	Clean and sand the surface following the procedure on page 63, (Section 8.4.1).
	Bonding area too small for the load on the joint.	Increase bonding area by adding fillets, bonded fasteners or scarf joints. See bonding note, page 65.
	Too much clamping pressure squeezed epoxy out of the joint.	Use just enough clamping pressure to squeeze a small amount of epoxy from the joint.
Runs or sags in coating.	Epoxy applied too thick.	1. Use 800 Roller Covers and roll the coating out into a thinner film. A thin film will flow out much smoother than a thicker film after it is tipped off with the foam roller brush. 2. Warm the epoxy to thin it or apply the coating at a warmer temperature.
	Coating curing too slowly.	1. Apply the coating at a warmer temperature. 2. Warm the resin and hardener before mixing to speed the cure in cool weather. 3. Switch to a faster hardener if possible.

PROBLEM	POSSIBLE CAUSES	SOLUTION
Clear coating turned cloudy.	Moisture from condensation or very humid conditions reacts with amines in uncured hardener.	1. Wash and sand cured coating to remove blush. Cloudiness may appear in the amine blush at the surface or throughout the coating. 2. Use 207 Hardener for clear coating applications. 3. Use 205 or 206 Hardeners for clear coating only in dry conditions. 4. Use 207 Hardener for laminating thin veneers that may allow epoxy to bleed to the surface, especially when vacuum bagging.
	Entrapped air from aggressive roller application.	1. Apply coating at warmer temperature–thinner epoxy. 2. Apply epoxy in thin coats.
Fairing compound (epoxy/407 or 410 mixture) sags and is difficult to sand.	Fairing material not thick enough.	1. Add more filler to the mixture until it reaches a "peanut butter" consistency–the more filler added, the stiffer and easier it will be to sand. 2. Allow the wet-out coat to gel before applying the fairing material to vertical surfaces.
Waxy film appears on surface of cured epoxy.	Amine blush forms as part of the curing process.	Blush formation is typical. Remove with water. See 8.4.1 Special preparation, page 64.
The hardener has turned red after several years storage.	Moisture in contact with hardener and metal container.	Red color will not affect epoxy performance. May not be suitable for clear coating or in exposed areas where color is not desired.
Paint or varnish will not set up over epoxy.	Epoxy not completely cured.	Allow the final epoxy coat to cure thoroughly. Allow several days if necessary for slow hardeners at cooler temperatures. Warm the epoxy, if possible.
	Paint incompatible with epoxy.	1. Use a different type of paint. Some single part polyurethanes are incompatible with the hardener. If unsure, test for compatibility on a coated piece of scrap material. 2. Use 207 Hardener.
	Epoxy surface not thoroughly prepared.	Remove the amine blush and sand the surface thoroughly before applying paints or varnishes. See 8.4.1 Special preparation, page 64.
Epoxy became very hot and cured too quickly.	Batch is too large.	1. Mix smaller batches. 2. Transfer the mixture to a container with more surface area, immediately after mixing.
	Temperature too warm for the hardener.	Use 206 Slow or 209 Tropical hardener in very warm weather.
Pinholes appear in epoxy coating over abraded fiberglass or epoxy.	Surface tension causes epoxy film to pull away from pinhole before it gels.	After applying epoxy with 800 Roller Cover, force epoxy into pinholes with a stiff plastic or metal spreader held at a low, nearly flat angle. Recoat and tip off coating after all pinholes are filled.
Bubbles formed in coating over bare wood or other porous material.	Air trapped in the wood escapes through coating (outgassing) as the wood's temperature is rising.	1. Coat the wood as its temperature is dropping– after warming the wood with heaters or during the later part of the day. 2. Apply a thinner coat, allowing air to escape easier. 3. Tip off the coating with a roller cover brush to break bubbles.

Wood data

Percentage increase in wood strength properties for 1% decrease in moisture content[1,2]

Species	Static bending: Fiber stress at proportional limit	Static bending: Modulus of rupture	Static bending: Modulus of elasticity	Static bending: Work to maximum load[3]	Compression parallel to grain — maximum crushing strength	Compression perpendicular to grain	Shearing strength parallel to grain	Side hardness
Ash, white	4.1	3.5	1.4	0.4	4.7	4.8	2.9	2.4
Birch, yellow	6.0	4.8	2.0	1.7	6.1	5.6	3.6	3.3
Cedar, northern white	5.4	3.6	1.8	- 1.5	5.9	2.3	2.8	3.0
Cedar, Port Orford	5.7	5.2	1.6	1.7	6.2	6.7	2.2	2.8
Cedar, western red	4.3	3.4	1.6	1.3	5.1	5.1	1.6	2.3
Fir, Douglas	4.5	3.7	1.8	1.9	5.5	5.0	1.7	2.9
Hickory, true	4.9	4.8	2.8	- 0.7	5.9	6.6	- 3.9	—
Mahogany, Honduras	2.6	1.3	0.8	- 2.9	2.5	3.9	—	1.0
Pine, eastern white	5.6	4.8	2.0	2.1	5.7	5.6	2.2	2.2
Spruce, Sitka	4.7	3.9	1.7	2.0	5.3	4.3	2.6	2.4

[1] Extracted from Munitions Board Aircraft Committee. *Design of Wood Aircraft Structures, ANC-18, 1951* (National Technical Information Service/U.S. Department of Commerce Reprint AD-490 100, Springfield VA), p. 13.

[2] Corrections to the strength properties should be made successively for each 1% change in moisture content until the total change has been covered. For each 1% decrease in moisture content, the strength is multiplied by (1 + P), where P is the percentage correction factor shown in the table and expressed as a decimal. For each 1% increase in moisture content, the strength is divided by (1 + P).

[3] Negative values indicate a decrease in work to maximum load for a decrease in moisture content.

Oven dry weight of veneers of varying thicknesses by species[1]

Species	Specific gravity[2]	% Air dry moisture content	Ounces per square foot veneer — Veneer thickness in inches: 1/16	1/8	3/16	1/4
Ash, white	0.58	8.9	3.02	6.04	9.05	12.06
Birch, yellow	0.63	9.6	3.28	6.56	9.84	13.12
Cedar, Spanish	0.37	7.3	1.92	3.85	5.77	7.70
Cedar, red	0.31		1.83	3.67	5.49	7.34
Fir, Douglas	0.51	6.2	2.65	5.30	7.96	10.6
Mahogany, African	0.46	8.0	2.39	4.78	7.17	9.57
Mahogany, Central American	0.49	7.9	2.55	5.10	7.66	10.20
Spruce, Sitka	0.38	8.9	1.98	3.96	5.94	7.94

[1] Extracted from Michelon and Devereaux, p. 163.

[2] Based on oven dry weight and air dry volume.

Species	Specific gravity[3]	Static bending: Modulus of rupture	Static bending: Modulus of elasticity[2]	Static bending: Work to maximum load	Compression parallel to grain-maximum crushing strength	Compression perpendicular to grain-fiber stress at proportional limit	Shear parallel to grain-maximum shearing strength	Tension perpendicular to grain-maximum tensile strength	Side hardness load perpendicular to grain	Impact bending height of drop causing complete failure
		psi	Million psi	Pounds per cubic inch	psi	psi	psi	psi	Pounds	Inches
Ash, white	.55	9,600	1.44	16.6	3,990	670	1,380	590	960	38
	.60	15,400	1.74	17.6	7,410	1,160	1,950	940	1,320	43
Balsa, medium	.17	2,900	.58	—	1,805	100	300	118	100	
Birch, yellow	.55	8,300	1.50	16.1	3,380	430	1,110	430	780	48
	.62	16,600	2.01	20.8	8,170	970	1,880	920	1,260	55
Cedar, Alaskan	.42	6,400	1.14	9.2	3,050	350	840	330	440	27
	.44	11,100	1.42	10.4	6,310	620	1,130	360	580	29
Cedar, Northern white	.29	4,200	.64	5.7	1,990	230	620	240	230	15
	.31	6,500	.80	4.8	3,960	310	850	240	320	12
Cedar, Port Orford	.39	6,600	1.30	7.4	3,140	300	840	180	380	21
	.43	12,700	1.70	9.1	6,250	720	1,370	400	630	28
Cedar, western red	.31	5,200	.94	5.0	2,770	240	770	230	260	17
	.32	7,500	1.11	5.8	4,560	460	990	220	350	17
Douglas fir, coast	.45	7,700	1.56	7.6	3,780	380	900	300	500	26
	.48	12,400	1.95	9.9	7,240	800	1,130	340	710	31
Hickory	.64	11,000	1.57	23.7	4,580	840	1,520	NA	NA	74
	.72	20,000	2.16	25.8	9,210	1,760	2,430	NA	NA	67
Lauan, light red	.41	7,500	1.44	NA	3,750	NA	840	NA	500	NA
	.44	11,300	1.67	NA	5,750	NA	1,090	NA	590	NA
Mahogany, Honduras	.45	9,300	1.28	9.6	4,510	NA	1,310	NA	700	NA
		11,600	1.51	7.9	6,630	NA	1,290	NA	810	NA
Meranti, dark red	.43	8,600	1.50	8.8	4,450	NA	NA	NA	560	NA
		12,100	1.63	11.7	6,970	NA	NA	NA	630	NA
Okoume/Gaboon	.37	7,300	1.14		3,900	NA	NA	NA	380	NA
Pine, loblolly	.47	7,300	1.40	8.2	3,510	390	860	260	450	30
	.51	12,800	1.79	10.4	7,130	790	1,390	470	690	30
Pine, longleaf	.54	8,500	1.59	8.9	4,320	480	1,040	330	590	35
	.59	14,500	1.98	11.8	8,470	960	1,510	470	870	34
Pine, white	.34	4,900	.99	5.2	2,440	220	680	250	290	17
	.35	8,600	1.24	6.8	4,800	440	900	310	380	18
Ramin	.59	9,800	1.57	9.0	5,395	NA	994		640	NA
	NA	18,400	2.17	17.0	10,080		1,514		1,300	NA
Spruce, black	.38	5,400	1.06	7.4	2,570	140	660	100	370	24
	.40	10,300	1.53	10.5	5,320	530	1,030		520	23
Spruce, Sitka	.37	5,700	1.23	6.3	2,670	280	760	250	350	24
	.40	10,200	1.57	9.4	5,610	580	1,150	370	510	25
Teak	.57	11,000	1.51	10.8	5,470		1,290		1,070	
	.63	12,800	1.59	10.1	7,110		1,480		1,030	

[1] Extracted from Forest Products Laboratory, *Wood Handbook*, U.S. Department of Agriculture Handbook No. 72. (Government Printing Office, Washington, D.C., 1974), pp. 4-7 — 4-17. Results of tests on small, clear, straight-grained specimens. Values in the first line for each species are from tests of green material; those in the second line are adjusted to 12% moisture content.

[2] Modulus of elasticity measured from a simply supported, center loaded beam, on a span depth ratio of 14 to 1. The modulus can be corrected for the effect of shear deflection by increasing it 10%.

[3] Specific gravity is based on weight when oven dry and volume when green, or at 12% moisture content.

Additional reading

Bingham, Bruce. *THE SAILOR'S SKETCHBOOK.* Camden, ME: Seven Seas, 1983.

Butler, Paul and Marya. *FINE YACHT FINISHES FOR WOOD AND FIBERGLASS BOATS.* Camden, ME: International Marine Publishing Co., 1987.

Chapelle, Howard L. *BOATBUILDING*. New York: W. W. Norton & Co., 1969.

Duffett, John. *BOAT OWNER'S GUIDE TO MODERN MAINTENANCE.* New York: W. W. Norton & Co., 1985.

Editors of WoodenBoat Magazine. *WOODEN BOAT: AN APPRECIATION OF THE CRAFT.* Reading, MA: Addison-Wesley Publishing Co., 1982.

Gougeon Brothers, Inc. *THE GOUGEON BROTHERS ON BOAT CONSTRUCTION*. 4th Edition, Bay City, MI: Gougeon Brothers, Inc., 1985.

McIntosh, David C. "Bud". *HOW TO BUILD A WOODEN BOAT.* Brooklin, ME: WoodenBoat Publications, Inc., 1987.

Monk, Edwin. *MODERN BOAT BUILDING*. New York: Charles Scribner's Sons, 1973.

Skoog, Jim. *CRUISING IN COMFORT*. Camden, Me: International Marine Publishing Co., 1986.

Spurr, Daniel. *SPURR'S BOAT BOOK: UPGRADING THE CRUISING SAILBOAT.* Camden, ME: Seven Seas, 1990.

Steward, Robert M. *BOATBUILDING MANUAL*. Camden, Me: International Marine Publishing Co., 1980.

Temple, Mark O. *THE COMPLETE STEP-BY-STEP BOAT REPAIR & RESTORATION HANDBOOK.* Blue Ridge Summit, PA: TAB Books Inc., 1981.

Trefethen, Jim. *WOODEN BOAT RENOVATION*. Camden, Me: International Marine Publishing Co.

Index

A

Adhesive fillers, 58
Aluminum, bonding to, 65
Assessing feasability, 2

B

Bonding,
  butt joints in planks, 31
  for stiffness, 6
  frames, 21
  gluing, 65
  hardware, 43
  joint repair, 22
  scarf joints in planks, 30
  splines in carvel planking, 29
  studs and threaded rods, 46
Butt joints, planks, 31

C

Carvel planking repair, 27
Cleanup, 56
Clear coating, 51
Coating,
  benefits of, 6
  for moisture protection, 50
Commitment, determining, 3
Controlling cure time, 60
Coverage, coating, 72
Cure stages, 59

D

Damage, inspecting and locating, 11
Dispensing epoxy, 61
Disposal, epoxy, 56
Double planking, repair, 32
Dry rot,
  cause, 4
  drilling and filling, 15
  filling with epoxy, 14
  filling with wood, 14
  repairing, 13

E

Epoxy coating, 50
Evaluating damage, 8

F

Fairing, technique, 68
Fastener bonding, 43
Fillers, description, 57
Fillets, 67
Floors, repair, 23
Frames,
  laminating, 17
  replacing, 19

G

Garboard, repair, 22
Glazing compound, 53

H

Hardeners, 57
Hardware casting, 45
Hardware, installing, 43
Hazards, 55
Historical value, 3

I

Inspecting the boat, 8

J

Joint repair, 22
Joint strength, 65

K

Keel bolt repair, 25
Keel repair, 25

L

Laminated skin repair, 37
Laminating, 66
Laminating frames, 17
Lapstrake plank repair, 32
Linear polyurethanes, 52

M

Manual overview, 2
Mini pumps, using, 61

O

Open time, 59

P

Paints, 52
Plastic, bonding to, 65
Plywood skin repair, 33
Pot life, 60
Precautions, health, 55
Preparation for bonding, 63
Primers, 53
Problem solving, 73

R

Removing epoxy, 63
Repair, definition, 2
Resin, 56
Resin-starved joints, 66
Restoration, definition, 2

S

Safety, 55
Scarf joint method, 30
Seams, carvel plank, 28
Shelf life,
  epoxy, 72
Single-step bonding, 66
Sister frames, installing, 21
Stiffness, loss of, 4
Structural framework, repairing, 17
Structural framework, understanding, 8
Stud bonding, 46
Sunlight, effects of, 48
Surface preparation, 63

T

Teak veneer deck, installing, 41
Teak, bonding to, 64
Thinning epoxy, 16
Threaded rods, bonding, 46
Two-step bonding, 65, 66

U

Ultraviolet,
  degradation, 48
  protection, 50
Using the manual, 2

V

Vacuum bagging, for laminating, 67
Ventilating for longevity, 7
Ventilation, 54

W

WEST SYSTEM epoxy,
  suitability for repair, 5
Wet-out, 65
Wooden boats,
  why they fail, 4

Additional building and repair information available from Gougeon Brothers, Inc.

Publications 002-950 **WEST SYSTEM® User Manual & Product Guide**
The primary guide to safety, handling and the basic techniques of epoxy use. Includes a complete description of WEST SYSTEM epoxy resin, hardeners, fillers, additives, reinforcing materials tools, supplies and publications.

002 **The Gougeon Brothers on Boat Construction**
This book is a must for anyone building a boat or working with wood and WEST SYSTEM epoxy. Includes extensive chapters on composite construction techniques, materials, lofting, safety and tools, with many illustrations, diagrams and photographs.

002-550 **Fiberglass Boat Repair & Maintenance**
A complete guide to repair fiberglass boats with WEST SYSTEM Epoxy. Includes illustrated procedures for structural reinforcement, deck and hull repair, hardware installation, keel repair and teak deck installation.

002-650 **Gelcoat Blisters-Diagnosis, Repair & Prevention**
A guide for repairing and preventing gelcoat blisters in fiberglass boats with WEST SYSTEM Epoxy. Includes an analysis of the factors that contribute to blister formation and illustrated steps for preparation, drying, repairing and coating for moisture protection.

002-150 **Vacuum Bagging Techniques**
A step-by-step guide to vacuum bag laminating techniques for bonding wood, core materials and fabrics with WEST SYSTEM Epoxy. Discusses theory, molds, equipment and techniques used to build composite structures.

002-740 **Final Fairing & Finishing**
Techniques for fairing wood, fiberglass, and metal surfaces. Includes fairing tools, materials and a general guide to finish coatings.

Video 002-892 **Basic Application Techniques**
A video primer on WEST SYSTEM Epoxy Products and their use. Includes safety procedures and application tips for coating, bonding and fairing. VHS–20 min.

002-894 **Fiberglass Repair with WEST SYSTEM Brand Epoxy**
A guide to structural repair on fiberglass boats. Covers repairs to cored and non-cored panels and how to apply gelcoat over epoxy repairs. VHS–20 min.

002-896 **Gelcoat Blister Repair with WEST SYSTEM Brand Epoxy**
A guide for repairing and preventing gelcoat blisters on fiberglass boats. Includes an analysis of the factors contributing to blister formation and steps for preparation, drying, repairing and coating for moisture protection. VHS–16 min.

002-970 Wooden Boat Restoration & Repair

Published by
Gougeon Brothers, Inc.
PO Box 908
Bay City, MI 48707
(989) 684-7286
Fax (989) 684-1374
www.westsystem.com

6th Edition · Printed 04/03